UniSec

Medium Voltage Switchgear

PT MULTIMAS NABATI ASAHAN

BIODIESEL PLANT

SCHEMATIC DIAGRAM

SBC-W INCOMING 2

H02

WE RESERVE ALL RIGHTS IN THIS DOCUMENT AND IN THE INFORMATION CONTAINED THEREIN. REPRODUCTION, USE OR DISCLOSURE TO THIRD PARTIES WITHOUT EXPESS AUTHORITY IS STRICTLY FORBIDDEN.

Ind.	Revision	Date	Name		
				Date Prep.	26.03.2020
				Prepared	YR
00	Issued for Approval	26.03.20	YR	Checked	AW
				Approved	AI

PROJECT TITLE: BIODIESEL AND FLEXTECH PLANT

Based on: BE320003

ABB EPMV

PT. ABB Sakti Industri

COVER SHEET
BIODIESEL PLANT
SCHEMATIC DIAGRAM
SBC-W INCOMING 2

Scale	NTS	= H02
Customer	PT Multimas Nabati Asahan	& 302
Drawing Nbr.	20.003-MNA-302	Sh. 1
Customer Doc. Nbr.		Cont. 29

SHEET INDEX

PAGE	PAGE NAME	REVISION		
==BIODIESEL_PLANT=H02&302/1	COVER SHEET	00		
==BIODIESEL_PLANT=H02&302/2	Index of Sheet	00		
==BIODIESEL_PLANT=H02&302/3	REFERENCE DESIGNATIONS	00		
==BIODIESEL_PLANT=H02&302/4	REFERENCE DESIGNATIONS	00		
==BIODIESEL_PLANT=H02&302/5	REFERENCE DESIGNATIONS	00		
==BIODIESEL_PLANT=H02&302/6	REFERENCE DESIGNATIONS	00		
==BIODIESEL_PLANT=H02&302/7	DISTRIBUTION OF AUXILIARY CIRCUITS	00		
==BIODIESEL_PLANT=H02&302/8	AUXILIARY CIRCUIT	00		
==BIODIESEL_PLANT=H02&302/9	CIRCUIT BREAKER CONTROL	00		
==BIODIESEL_PLANT=H02&302/10	AUXILIARY MOTOR & RELAY	00		
==BIODIESEL_PLANT=H02&302/11	DIGITAL INPUT/OUPUT RELAY	00		
==BIODIESEL_PLANT=H02&302/12	SPARE CONTACT	00		
==BIODIESEL_PLANT=H02&302/13	SPARE CONTACT	00		
==BIODIESEL_PLANT=H02&302/14	CURRENT TRANSFOMER	00		
==BIODIESEL_PLANT=H02&302/15	VOLTAGE TRANSFORMER	00		
==BIODIESEL_PLANT=H02&302/16	LV DOOR LAYOUT	00		
==BIODIESEL_PLANT=H02&302/17	LV BOX LAYOUT	00		
==BIODIESEL_PLANT=H02&302/18	PART LIST	00		
==BIODIESEL_PLANT=H02&302/19	Terminal diagram ==BIODIESEL_PLANT=H02+-XCK	00		
==BIODIESEL_PLANT=H02&302/20	Terminal diagram ==BIODIESEL_PLANT=H02+-XDA	00		
==BIODIESEL_PLANT=H02&302/21	Terminal diagram ==BIODIESEL_PLANT=H02+-XDB1	00		
==BIODIESEL_PLANT=H02&302/22	Terminal diagram ==BIODIESEL_PLANT=H02+-XDC1	00		
==BIODIESEL_PLANT=H02&302/23	Terminal diagram ==BIODIESEL_PLANT=H02+-XDC2	00		
==BIODIESEL_PLANT=H02&302/24	Terminal diagram ==BIODIESEL_PLANT=H02+-XDI	00		
==BIODIESEL_PLANT=H02&302/25	Terminal diagram ==BIODIESEL_PLANT=H02+-XDI2	00		
==BIODIESEL_PLANT=H02&302/26	Terminal diagram ==BIODIESEL_PLANT=H02+-XDI3	00		
==BIODIESEL_PLANT=H02&302/27	Terminal diagram ==BIODIESEL_PLANT=H02+-XDI6	00		
==BIODIESEL_PLANT=H02&302/28	Terminal diagram ==BIODIESEL_PLANT=H02+-XDV	00		
==BIODIESEL_PLANT=H02&302/29	Terminal diagram ==BIODIESEL_PLANT=H02+-XDX	00		

WE RESERVE ALL RIGHTS IN THIS DOCUMENT AND IN THE INFORMATION CONTAINED THEREIN. REPRODUCTION, USE OR DISCLOSURE TO THIRD PARTIES WITHOUT EXPESS AUTHORITY IS STRICTLY FORBIDDEN.

Ind.	Revision	Date	Name		
				Date Prep.	26.03.2020
				Prepared	YR
00	Issued for Approval	26.03.20	YR	Checked	AW
				Approved	AI

PROJECT TITLE
BIODIESEL AND FLEXTECH PLANT
Based on: BE320003

ABB EPMV
PT. ABB Sakti Industri

Index of Sheet
BIODIESEL PLANT
SCHEMATIC DIAGRAM
SBC-W INCOMING 2

Scale	NTS	= H02
Customer	PT Multimas Nabati Asahan	& 302
Drawing Nbr.	20.003-MNA-302	Sh. 2
Customer Doc. Nbr.		Cont. 29

REFERENCE DESIGNATION OF OBJECTS IN ELECTRICAL DOCUMENTS

(IN COMPLIANCE WITH STANDARD IEC 81346-2 AND ABB TECHNICAL STANDARD 2NBA000001)

DESIGNATION	DESCRIPTION
-AA	MULTIFUNCTION UNIT (CENTRAL UNIT)
-BAD1,-BAD4	CAPACITIVE VOLTAGE DIVIDER LOCATED ON PHASE L1
-BAD2,-BAD5	CAPACITIVE VOLTAGE DIVIDER LOCATED ON PHASE L2
-BAD3,-BAD6	CAPACITIVE VOLTAGE DIVIDER LOCATED ON PHASE L3
-BAR	VOLTAGE PROTECTION RELAY
-BAS1	VOLTAGE SENSOR LOCATED ON PHASE L1
-BAS2	VOLTAGE SENSOR LOCATED ON PHASE L2
-BAS3	VOLTAGE SENSOR LOCATED ON PHASE L3
-BAT1	VOLTAGE TRANSFORMER LOCATED ON PHASE L1
-BAT2	VOLTAGE TRANSFORMER LOCATED ON PHASE L2
-BAT3	VOLTAGE TRANSFORMER LOCATED ON PHASE L3
-BAT4	VOLTAGE TRANSFORMER IN BUSBAR COMPARTMENT LOCATED ON PHASE L1
-BAT5	VOLTAGE TRANSFORMER IN BUSBAR COMPARTMENT LOCATED ON PHASE L2
-BAT6	VOLTAGE TRANSFORMER IN BUSBAR COMPARTMENT LOCATED ON PHASE L3
-BCD	DIFFERENTIAL PROTECTIVE RELAY
-BCF	FEEDER PROTECTION RELAY
-BCG	GENERATOR PROTECTION RELAY
-BCM	MOTOR PROTECTION RELAY
-BCN	NEUTRAL (RESIDUAL) CURRENT TRANSFORMER
-BCP	TRANSFORMER PROTECTION RELAY
-BCR	CURRENT PROTECTION RELAY
-BCS1	CURRENT SENSOR LOCATED ON PHASE L1
-BCS2	CURRENT SENSOR LOCATED ON PHASE L2
-BCS3	CURRENT SENSOR LOCATED ON PHASE L3
-BCT1	CURRENT TRANSFORMER LOCATED ON PHASE L1
-BCT2	CURRENT TRANSFORMER LOCATED ON PHASE L2
-BCT3	CURRENT TRANSFORMER LOCATED ON PHASE L3
-BCT4,-BCT7	CURRENT TRANSFORMER LOCATED ON PHASE L1
-BCT5,-BCT8	CURRENT TRANSFORMER LOCATED ON PHASE L2
-BCT6,-BCT9	CURRENT TRANSFORMER LOCATED ON PHASE L3
-BCZ	DISTANCE PROTECTION RELAY
-BEF	FREQUENCY PROTECTION RELAY
-BER	SUPERVISION RELAYS
-BES	SYNCHRONIZING RELAY
-BET	THERMAL PROTECTION RELAY
-BGA1	POSITION SWITCH FOR DETECTION OF INTERNAL ARCING IN CIRCUIT-BREAKER COMPARTMENT
-BGA2	POSITION SWITCH FOR DETECTION OF INTERNAL ARCING IN BUSBAR COMPARTMENT (SINGLE BUSBAR SYSTEM) OR IN FRONT BUSBAR COMPARTMENT (DOUBLE BUSBAR SYSTEM)
-BGA3	POSITION SWITCH FOR DETECTION OF INTERNAL ARCING IN CABLE COMPARTMENT
-BGA4	POSITION SWITCH FOR DETECTION OF INTERNAL ARCING IN REAR BUSBAR COMPARTMENT (DOUBLE BUSBAR SYSTEM)
-BGB1...-BGB3	POSITION SWITCHES OF CIRCUIT-BREAKER
-BGB4	POSITION SWITCH OF CIRCUIT-BREAKER: PASSING CONTACT CLOSING MOMENTARILY WHEN THE BREAKER OPENS
-BGB5	POSITION SWITCH OF CIRCUIT-BREAKER SIGNALLING UNDERVOLTAGE RELEASE ENERGIZED
-BGB6	POSITION SWITCH OF CIRCUIT-BREAKER SIGNALLING UNDERVOLTAGE RELEASE EXCLUDED MECHANICALLY
-BGB7	POSITION SWITCHES OF CIRCUIT-BREAKER ON SWITCHGEAR
-BGB8...-BGB10	POSITION SWITCHES OF CIRCUIT-BREAKER
-BGB11	POSITION SWITCH OF CIRCUIT-BREAKER OPERATING FOR MANUAL OPENING
-BGB12	PROXIMITY SWITCH SIGNALLING CIRCUIT-BREAKER IN OPEN POSITION
-BGB13	PROXIMITY SWITCH SIGNALLING CIRCUIT-BREAKER IN CLOSED POSITION
-BGD	POSITION SWITCH OF L.V. INSTRUMENT COMPARTMENT DOOR.
-BGD1	POSITION SWITCH OF CIRCUIT-BREAKER COMPARTMENT DOOR
-BGD2	POSITION SWITCH OF CABLE COMPARTMENT DOOR
-BGE1	POSITION SWITCHES SIGNALLING EARTHING SWITCH -QCE IN OPEN POSITION
-BGE2	POSITION SWITCHES SIGNALLING EARTHING SWITCH -QCE IN CLOSED POSITION
-BGE3	POSITION SWITCHES SIGNALLING EARTHING SWITCH -QCE IN OPEN POSITION AND NOT IN OPERATION (OPERATING LEVER NOT INSERTED)
-BGE4	POSITION SWITCHES OF OPERATION OF EARTHING SWITCH -QCE ACTUATED BY ELECTRIC MOTOR
-BGE5	POSITION SWITCHES OF OPERATION OF EARTHING SWITCH -QCE1 OR -QCE2 ACTUATED BY ELECTRIC MOTOR
-BGE7	POSITION SWITCH SIGNALLING EARTHING SWITCH NOT IN MANUAL OPERATION
-BGE8	POSITION SWITCHES OF EARTHING SWITCH -QCE SUPPLIED TOGETHER WITH SWITCH- DISCONNECTOR -QBS
-BGE11	POSITION SWITCHES SIGNALLING EARTHING SWITCH -QCE1 OR -QCE2 IN OPEN POSITION
-BGE12	POSITION SWITCHES SIGNALLING EARTHING SWITCH -QCE1 OR -QCE2 IN CLOSED POSITION
-BGE13	POSITION SWITCHES SIGNALLING EARTHING SWITCH -QCE1 OR -QCE2 IN OPEN POSITION AND NOT IN OPERATION (OPERATING LEVER NOT INSERTED)
-BGE14, -BGE15	POSITION SWITCHES FOR OPERATION OF EARTHING SWITCH -QCE SUPPLIED TOGETHER WITH SWITCH-DISCONNECTOR -QBS, ACTUATED BY ELECTRIC MOTOR
-BGF	POSITION SWITCHES OF MEDIUM VOLTAGE FUSES
-BGI1	POSITION SWITCHES SIGNALLING DISCONNECTOR -QBD IN OPEN POSITION
-BGI2	POSITION SWITCHES SIGNALLING DISCONNECTOR -QBD IN CLOSED POSITION
-BGI3	POSITION SWITCHES SIGNALLING DISCONNECTOR -QBD IN OPEN POSITION AND NOT IN OPERATION (OPERATING LEVER NOT INSERTED)
-BGI4	POSITION SWITCHES OF OPERATION OF DISCONNECTOR -QBD1 ACTUATED BY ELECTRIC MOTOR
-BGI5	POSITION SWITCHES OF OPERATION OF DISCONNECTOR -QBD2 ACTUATED BY ELECTRIC MOTOR
-BGI6	POSITION SWITCH SIGNALLING DISCONNECTOR (OR SWITCH-DISCONNECTOR) -QBD NOT IN EMERGENCY MANUAL OPERATION
-BGI7	POSITION SWITCH SIGNALLING DICONNECTOR (OR SWITCH-DISCONNECTOR) -QBD NOT IN MANUAL OPERATION
-BGI8	POSITION SWITCHES OF SWITCH-DISCONNECTOR -QBS
-BGI9	POSITION SWITCHES OF OPERATION OF SWITCH-DISCONNECTOR -QBS ACTUATED BY ELECTRIC MOTOR
-BGI11	POSITION SWITCHES SIGNALLING DISCONNECTOR -QBD1 IN OPEN POSITION
-BGI12	POSITION SWITCHES SIGNALLING DISCONNECTOR -QBD1 IN CLOSED POSITION
-BGI13	POSITION SWITCHES SIGNALLING DISCONNECTOR -QBD1 IN OPEN POSITION AND NOT IN OPERATION (OPERATING LEVER NOT INSERTED)
-BGI14, -BGI15	POSITION SWITCHES OF OPERATION OF DISCONNECTOR -QBD1 ACTUATED BY ELECTRIC MOTOR
-BGI21	POSITION SWITCHES SIGNALLING DISCONNECTOR -QBD2 IN OPEN POSITION
-BGI22	POSITION SWITCHES SIGNALLING DISCONNECTOR -QBD2 IN CLOSED POSITION
-BGI23	POSITION SWITCHES SIGNALLING DISCONNECTOR -QBD2 IN OPEN POSITION AND NOT IN OPERATION (OPERATING LEVER NOT INSERTED)
-BGI24, -BGI25	POSITION SWITCHES OF OPERATION OF DISCONNECTOR -QBD2 ACTUATED BY ELECTRIC MOTOR

Ind.	Revision	Date	Name		
				Date Prep.	26.03.2020
				Prepared	YR
00	Issued for Approval	26.03.20	YR	Checked	AW
				Approved	AI

PROJECT TITLE
BIODIESEL AND FLEXTECH PLANT
Based on: BE320003

ABB EPMV
PT. ABB Sakti Industri

REFERENCE DESIGNATIONS
BIODIESEL PLANT
SCHEMATIC DIAGRAM
SBC-W INCOMING 2

Scale	NTS	= H02
Customer	PT Multimas Nabati Asahan	& 302
Drawing Nbr.	20.003-MNA-302	Sh. 3
Customer Doc. Nbr.		Cont. 29

WE RESERVE ALL RIGHTS IN THIS DOCUMENT AND IN THE INFORMATION CONTAINED THEREIN. REPRODUCTION, USE OR DISCLOSURE TO THIRD PARTIES WITHOUT EXPESS AUTHORITY IS STRICTLY FORBIDDEN.

-BGI31	POSITION SWITCHES SIGNALLING DISCONNECTOR -QBD3 IN OPEN POSITION
-BGI32	POSITION SWITCHES SIGNALLING DISCONNECTOR -QBD3 IN CLOSED POSITION
-BGI33	POSITION SWITCHES SIGNALLING DISCONNECTOR -QBD3 IN OPEN POSITION AND NOT IN OPERATION (OPERATING LEVER NOT INSERTED)
-BGI41...	POSITION SWITCHES SIGNALLING SWITCH-DISCONNECTOR -QBS CLOSED IN FEEDER POSITION
-BGI42	POSITION SWITCHES SIGNALLING SWITCH-DISCONNECTOR -QBS IN OPEN POSITION
-BGI43...	POSITION SWITCHES SIGNALLING SWITCH-DISCONNECTOR -QBS CLOSED IN EARTH POSITION
-BGI51	POSITION SWITCHES SIGNALLING DISCONNECTOR -QBD5 CLOSED IN FEEDER POSITION
-BGI52	POSITION SWITCHES SIGNALLING DISCONNECTOR -QBD5 IN OPEN POSITION
-BGI53	POSITION SWITCHES SIGNALLING DISCONNECTOR -QBD5 CLOSED IN EARTH POSITION
-BGK	POSITION SWITCH OF KEY LOCK
-BGL1	POSITION SWITCH OF ELECTROMECHANICAL LOCK -RLE1
-BGS1...-BGS4	POSITION SWITCHES OF CIRCUIT-BREAKER SPRINGS
-BGS5	PROXIMITY SWITCH SIGNALLING SPRINGS IN CHARGED POSITION
-BGT1	POSITION SWITCHES ON TRUCK SIGNALLING TRUCK IN SERVICE POSITION
-BGT2	POSITION SWITCHES ON TRUCK SIGNALLING TRUCK IN TEST POSITION
-BGT3	POSITION SWITCH ON TRUCK SIGNALLING TRUCK NOT IN ISOLATING TRAVEL POSITION
-BGT4	POSITION SWITCHES ON SWITCHGEAR SIGNALLING TRUCK IN SERVICE POSITION
-BGT5	POSITION SWITCHES ON SWITCHGEAR SIGNALLING TRUCK IN TEST POSITION
-BGT6	POSITION SWITCHES SIGNALLING V.T. TRUCK IN SERVICE POSITION
-BGT7	POSITION SWITCHES SIGNALLING V.T. TRUCK IN TEST POSITION
-BGT8	POSITION SWITCHES SIGNALLING EARTHING TRUCK IN SERVICE POSITION
-BGT11	PROXIMITY SWITCH SIGNALLING TRUCK IN SERVICE POSITION
-BGT12	PROXIMITY SWITCH SIGNALLING TRUCK IN TEST POSITION
-BGV1	POSITION SWITCH OF FRONT VENTILATOR
-BGV2	POSITION SWITCH OF REAR VENTILATOR
-BM	HYGROSTAT
-BPA4	PRESSURE SWITCH LOCATED IN CABLE COMPARTMENT FOR DETECTION OF INTERNAL ARCING
-BPA5	PRESSURE SWITCH LOCATED IN CIRCUIT-BREAKER OR IN UPPER VT COMPARTMENT FOR DETECTION OF INTERNAL ARCING
-BPA6	PRESSURE SWITCH LOCATED IN BUSBAR OR IN BUSBAR AND CIRCUIT-BREAKER COMPARTMENT FOR DETECTION OF INTERNAL ARCING
-BPA7	PRESSURE SWITCH LOCATED IN VOLTAGE TRANSFORMER ISOLATING COMPARTMENT FOR DETECTION OF INTERNAL ARCING
-BPS1	PRESSURE SWITCH LOCATED ON CIRCUIT-BREAKER OR ON POLE OF PHASE L1 OF CIRCUIT-BREAKER
-BPS2	PRESSURE SWITCH LOCATED ON CIRCUIT-BREAKER POLE OF PHASE L2
-BPS3	PRESSURE SWITCH LOCATED ON CIRCUIT-BREAKER POLE OF PHASE L3
-BR	FLAME DETECTORS, SMOKE DETECTORS
-BT	THERMOSTAT
-BT1	THERMOSTAT FOR DE-ENERGIZATION OF VENTILATORS
-BT2	THERMOSTAT FOR ENERGIZATION OF VENTILATORS
-BT3	THERMOSTAT SIGNALLING HIGH TEMPERATURE ALARM
-BU	BUCHHOLZ RELAY
-BX1	UNIT WITH SENSORS FOR DETECTION OF INTERNAL ARCING
-BX2	ADDITIONAL CURRENT SENSING UNIT FOR DETECTION OF INTERNAL ARCING
-BZ,-BZ4	MULTIFUNCTION SENSORS
-BZ1	COMBINED CURRENT AND VOLTAGE SENSOR, LOCATED ON PHASE L1
-BZ2	COMBINED CURRENT AND VOLTAGE SENSOR, LOCATED ON PHASE L2
-BZ3	COMBINED CURRENT AND VOLTAGE SENSOR, LOCATED ON PHASE L3

-CA	CAPACITORS
-CA1	CAPACITOR FOR FRONT VENTILATOR
-CA2	CAPACITOR FOR REAR VENTILATOR
-EA1	LIGHTING LAMP LOCATED IN L.V. INSTRUMENT COMPARTMENT.
-EA2	LIGHTING LAMP LOCATED IN CABLE COMPARTMENT
-EA3	LIGHTING LAMP LOCATED IN OPERATING MECHANISM ENCLOSURE
-EA4	LIGHTING LAMP LOCATED IN CIRCUIT BREAKER COMPARTIMENT
-EB1	HEATER LOCATED IN CABLE COMPARTMENT
-EB2	HEATER LOCATED IN CIRCUIT-BREAKER COMPARTMENT
-EB3	HEATER LOCATED IN MOTOR CABINET
-EB4	HEATER FOR VENTILATION TEST
-EB5	HEATER LOCATED IN L.V. INSTRUMET COMPARTMENT.
-EB7	HEATERS LOCATED IN LEFT SIDE OF THE OPERATING MECHANISM ENCLOSURE
-EB8	HEATERS LOCATED IN RIGHT SIDE OF THE OPERATING MECHANISM ENCLOSURE
-FA1	SURGE ARRESTER LOCATED ON PHASE L1
-FA2	SURGE ARRESTER LOCATED ON PHASE L2
-FA3	SURGE ARRESTER LOCATED ON PHASE L3
-FCD	FUSE-DISCONNECTORS FOR PROTECTION OF AUXILIARY CIRCUITS
-FCF1	MEDIUM VOLTAGE FUSE LOCATED ON PHASE L1
-FCF2	MEDIUM VOLTAGE FUSE LOCATED ON PHASE L2
-FCF3	MEDIUM VOLTAGE FUSE LOCATED ON PHASE L3
-FCM1	MINIATURE CIRCUIT-BREAKER FOR PROTECTION OF SPRINGS CHARGING MOTOR ON MAIN CIRCUIT-BREAKER
-FCM2...-FCM10	MINIATURE CIRCUIT-BREAKERS FOR PROTECTION OF AUXILIARY CIRCUITS
-FCM11	MINIATURE CIRCUIT-BREAKER FOR PROTECTION OF VENTILATOR -MV1
-FCM12	MINIATURE CIRCUIT-BREAKER FOR PROTECTION OF VENTILATOR -MV2
-FCM13	MINIATURE CIRCUIT-BREAKER FOR PROTECTION OF VENTILATOR -MV3
-FCT	THERMAL OVERLOAD RELEASES
-GA	GENERATORS
-GQ1	FRONT VENTILATOR
-GQ2	REAR VENTILATOR
-GQ3	VENTILATOR LOCATED ON CIRCUIT-BREAKER TRUCK
-KFA1	AUXILIARY RELAY SIGNALLING LOW GAS PRESSURE
-KFA2	AUXILIARY RELAY SIGNALLING INSUFFICIENT GAS PRESSURE
-KFA3...-KFA9	AUXILIARY RELAYS OR CONTACTORS
-KFC	CLOSING RELAYS OR CONTACTORS
-KFI	INTEGRATED CIRCUITS
-KFL	LOCKOUT RELAY
-KFM	MICROPROCESSORS
-KFN	ANTIPUMPING RELAYS
-KFO	OPENING RELAYS OR CONTACTORS
-KFP	PROGRAMMABLE LOGIC CONTROLLERS (PLC)
-KFR	RECLOSING RELAYS
-KFS	SYNCHRONIZING DEVICES
-KFT	AUXILIARY TIME RELAYS, DELAY ELEMENTS
-KFZ	CONTROLLERS
-MBC	CLOSING RELEASE OF CIRCUIT-BREAKER
-MAD	MOTOR FOR ELECTRICAL OPERATION OF DISCONNECTOR -QBD
-MAD1	MOTOR FOR ELECTRICAL OPERATION OF DICONNECTOR -QBD1
-MAD2	MOTOR FOR ELECTRICAL OPERATION OF DICONNECTOR -QBD2
-MAD9	MOTOR FOR ELECTRICAL OPERATION OF SWITCH-DISCONNECTOR -QBS

WE RESERVE ALL RIGHTS IN THIS DOCUMENT AND IN THE INFORMATION CONTAINED THEREIN. REPRODUCTION, USE OR DISCLOSURE TO THIRD PARTIES WITHOUT EXPESS AUTHORITY IS STRICTLY FORBIDDEN.

Ind.	Revision	Date	Name		
				Date Prep.	26.03.2020
				Prepared	YR
00	Issued for Approval	26.03.20	YR	Checked	AW
				Approved	AI

PROJECT TITLE
BIODIESEL AND FLEXTECH PLANT
Based on: BE320003

ABB EPMV
PT. ABB Sakti Industri

REFERENCE DESIGNATIONS
BIODIESEL PLANT
SCHEMATIC DIAGRAM
SBC-W INCOMING 2

Scale	NTS	= H02
Customer	PT Multimas Nabati Asahan	& 302
Drawing Nbr.	20.003-MNA-302	Sh. 4
Customer Doc. Nbr.		Cont. 29

-MAE	MOTOR FOR ELECTRICAL OPERATION OF EARTHING SWITCH -QCE
-MAE1	MOTOR FOR ELECTRICAL OPERATION OF EARTHING SWITCH -QCE1 OR -QCE2
-MAE8	MOTOR FOR ELECTRICAL OPERATION OF EARTHING SWITCH -QCE SUPPLIED TOGETHER WITH SWITCH-DISCONNECTOR -QBS
-MAS	MOTOR FOR CIRCUIT-BREAKER SPRINGS CHARGING
-MAT	MOTOR FOR ELECTRICAL OPERATION OF TRUCK RACKING-IN/OUT
-MBC	CLOSING RELEASE OF CIRCUIT-BREAKER
-MBC4	CLOSING RELEASE OF SWITCH-DISCONNECTOR -QBS
-MBO1	FIRST OPENING RELEASE OF CIRCUIT-BREAKER
-MBO2	SECOND OPENING RELEASE OF CIRCUIT-BREAKER
-MBO3	OPENING SOLENOID FOR OVERCURRENT RELEASE OF CIRCUIT-BREAKER OR INDIRECT OVERCURRENT RELEASE ON CIRCUIT-BREAKER
-MBO4	OPENING RELEASE OF SWITCH-DISCONNECTOR -QBS
-MBU	UNDERVOLTAGE RELEASE OF CIRCUIT-BREAKER
-PFB	BLUE SIGNAL LAMPS
-PFF	FLAG RELAYS
-PFG	GREEN SIGNAL LAMPS
-PFR	RED SIGNAL LAMPS
-PFS	SHORT CIRCUIT INDICATORS
-PFV	VOLTAGE INDICATORS
-PFV1	VOLTAGE INDICATORS ON FEEDER SIDE
-PFV2	VOLTAGE INDICATORS ON BUSBAR SIDE
-PFW	WHITE SIGNAL LAMPS
-PFX	CROSS INDICATORS, ELECTROMECHANICAL INDICATORS
-PFY	YELLOW SIGNAL LAMPS
-PGA	AMMETERS
-PGC	COUNTERS
-PGF	FREQUENCYMETERS
-PGH	HOURMETERS
-PGI	PROTECTION AND CONTROL UNIT: HUMAN MACHINE INTERFACE
-PGI1	HUMAN MACHINE INTERFACE OF ELECTRONIC CONTROLLED CIRCUIT-BREAKER (ON CIRCUIT-BREAKER)
-PGI2	HUMAN MACHINE INTERFACE FOR ELECTRONIC CONTROLLED CIRCUIT-BREAKER (ON SWITCHGEAR)
-PGJ	ACTIVE ENERGY METERS
-PGK	REACTIVE ENERGY METERS
-PGM	MULTIFUNCTION INDICATORS
-PGP	POWER-FACTOR METERS
-PGQ	VARMETERS
-PGS	SYNCHRONOSCOPES
-PGV	VOLTMETERS
-PGW	WATTMETERS
-PJ	ACOUSTICAL SIGNAL DEVICES (BELLS, SIRENS)
-QAB	CIRCUIT-BREAKERS
-QAC	CONTACTORS (FOR POWER)
-QBD	DISCONNECTORS
-QBD1	FRONT BUSBAR DISCONNECTORS (DOUBLE BUSBAR SYSTEM)
-QBD2	REAR BUSBAR DISCONNECTORS (DOUBLE BUSBAR SYSTEM)
-QBD3	FEEDER DISCONNECTORS (DOUBLE BUSBAR SYSTEM)
-QBD4	TWO-WAY DISCONNECTOR
-QBD5	TWO-WAY DISCONNECTOR ON BUSBAR RISER
-QBH	MANUAL CIRCUIT-BREAKERS
-QBL	LINKS
-QBM	MINIATURE SWITCH-DISCONNECTORS
-QBS	SWITCH-DISCONNECTORS
-QBT	TRUCK
-QCA	EARTHING SWITCH FOR ELIMINATION OF INTERNAL ARCING
-QCE	EARTHING SWITCH
-QCE1	EARTHING SWITCH OF BUSBARS (SINGLE BUSBAR SYSTEM) OR OF FRONT BUSBARS (DOUBLE BUSBAR SYSTEM)
-QCE2	EARTHING SWITCH OF REAR BUSBARS (DOUBLE BUSBAR SYSTEM)
-QQ	CLUTCHES
-RAA	ANTIFERRORESONANCE RESISTOR
-RAD	DIODES
-RAI	INDUCTORS
-RAR	RESISTORS
-RF	FILTERS
-RLE1	ELECTROMECHANICAL LOCK PREVENTING CIRCUIT-BREAKER CLOSING
-RLE2	ELECTROMECHANICAL LOCK PREVENTING TRUCK RACKING-IN/OUT
-RLE3	ELECTROMECHANICAL LOCK PREVENTING INSERTION OF LEVER FOR CLOSING OPERATION OF EARTHING SWITCH -QCE
-RLE4	ELECTROMECHANICAL LOCK PREVENTING THE DOOR OPENING OPERATION
-RLE5	ELECTROMECHANICAL LOCK PREVENTING OPERATION OF DISCONNECTOR -QBD
-RLE6	ELECTROMECHANICAL LOCK PREVENTING INSERTION OF LEVER FOR CLOSING OPERATION OF DISCONNECTOR -QBD1
-RLE7	ELECTROMECHANICAL LOCK PREVENTING INSERTION OF LEVER FOR CLOSING OPERATION OF DISCONNECTOR -QBD2
-RLE8	ELECTROMECHANICAL LOCK PREVENTING INSERTION OF LEVER FOR CLOSING OPERATION OF EARTHING SWITCH -QCE1 OR -QCE2
-RLE9	ELECTROMECHANICAL LOCK PREVENTING OPERATION OF SWITCH-DISCONNECTOR -QBS
-RLE11	ELECTROMECHANICAL LOCK PREVENTING INSERTION OF LEVER FOR OPERATION OF DISCONNECTOR -QBD4
-RLE12	ELECTROMECHANICAL LOCK PREVENTING INSERTION OF LEVER FOR OPERATION OF DISCONNECTOR -QBD5
-SFA	AMMETRIC SWITCHES
-SFC	CONTROL SWITCHES, CLOSING PUSH-BUTTONS
-SFL	LOCKING CONTACTS
-SFO	OPENING PUSH-BUTTONS
-SFR	RESET PUSH-BUTTONS
-SFS	SELECTOR SWITCHES
-SFT	TEST PUSH-BUTTONS
-SFU	UNLOCKING PUSH-BUTTONS
-SFV	VOLTMETRIC SWITCHES
-TA	POWER TRANSFORMERS
-TB	CONVERTER
-TB1	RECTIFIER FOR FIRST OPENING RELEASE
-TB2	RECTIFIER FOR SECOND OPENING RELEASE
-TB3	RECTIFIER FOR CLOSING RELEASE
-TB4	RECTIFIER FOR ELECTROMECHANICAL LOCK PREVENTING CIRCUIT-BREAKER CLOSING
-TB5	RECTIFIER FOR ELECTROMECHANICAL LOCK PREVENTING TRUCK RACKING-IN/OUT
-TB6	RECTIFIER FOR UNDERVOLTAGE RELEASE
-TB7	ERECTIFIER FOR INDIRECT OVERCURRENT RELEASE ON CIRCUIT-BREAKER

Ind.	Revision	Date	Name		
				Date Prep.	26.03.2020
				Prepared	YR
00	Issued for Approval	26.03.20	YR	Checked	AW
				Approved	AI

PROJECT TITLE
BIODIESEL AND FLEXTECH PLANT
Based on: BE320003

ABB EPMV
PT. ABB Sakti Industri

REFERENCE DESIGNATIONS
BIODIESEL PLANT
SCHEMATIC DIAGRAM
SBC-W INCOMING 2

Scale	NTS	= H02
Customer	PT Multimas Nabati Asahan	& 302
Drawing Nbr.	20.003-MNA-302	Sh. 5
Customer Doc. Nbr.		Cont. 29

WE RESERVE ALL RIGHTS IN THIS DOCUMENT AND IN THE INFORMATION CONTAINED THEREIN. REPRODUCTION, USE OR DISCLOSURE TO THIRD PARTIES WITHOUT EXPESS AUTHORITY IS STRICTLY FORBIDDEN.

-TFA	ACTIVE POWER TRANSDUCERS
-TFC	CURRENT TRANSDUCERS
-TFF	FREQUENCY TRANSDUCERS
-TFJ	ACTIVE ENERGY TRANSDUCERS
-TFK	REACTIVE ENERGY TRANSDUCERS
-TFM	MULTIFUNCTION TRANSDUCERS
-TFP	POWER-FACTOR TRANSDUCERS
-TFQ	REACTIVE POWER TRANSDUCERS
-TFS	SIGNAL CONVERTERS
-TFV	VOLTAGE TRANSDUCERS
-WA	BUSBARS
-WBC	POWER CABLES
-WE	EARTHING CABLES FOR L.V. INSTRUMENT COMPARTMENT.
-WGC	CONTROL CABLES
-WGS	COMMUNICATION CABLES (SHIELDED TWISTED PAIRS)
-WH	OPTICAL FIBRES
-XDA	TERMINAL BLOCK FOR CIRCUITS OF CURRENT TRANSFORMERS
-XDA1	CONNECTOR FOR CIRCUITS OF CURRENT TRANSFORMERS LOCATED ON PHASE L1
-XDA2	CONNECTOR FOR CIRCUITS OF CURRENT TRANSFORMERS LOCATED ON PHASE L2
-XDA3	CONNECTOR FOR CIRCUITS OF CURRENT TRANSFORMERS LOCATED ON PHASE L3
-XDA5	CONNECTOR FOR CIRCUITS OF NEUTRAL (RESIDUAL) CURRENT TRANSFORMER
-XDB	CONNECTOR FOR ISOLATION OF CIRCUIT-BREAKER (OR UPPER VOLTAGE TRANSFORMER TRUCK) AUXILIARY CIRCUITS
-XDB1	CONNECTOR FOR AUXILIARY CIRCUITS OF CIRCUIT-BREAKER (OR UPPER VOLTAGE TRANSFORMER TRUCK)
-XDB2	CONNECTOR FOR ADDITIONAL AUXILIARY CIRCUITS OF CIRCUIT-BREAKER
-XDB10...-XDB89	CONNECTOR FOR CIRCUIT-BREAKER INTERNAL CIRCUITS
-XDB7	CONNECTOR FOR TRUCK POSITION CONTACTS
-XDB91	CONNECTOR FOR OPENING RELEASE CIRCUITS OF SWITCH-DISCONNECTOR
-XDB92	CONNECTOR FOR CLOSING RELEASE CIRCUITS OF SWITCH-DISCONNECTOR
-XDB93	CONNECTOR FOR POSITION SWITCHES OF SWITCH-DISCONNECTOR
-XDB95	CONNECTOR FOR CIRCUITS OF EARTHING SWITCH LOCKING MAGNET
-XDC	CUSTOMER TERMINAL BLOCK
-XDC1	CUSTOMER TERMINAL BLOCK FOR AUXILIARY CIRCUITS OF CIRCUIT BREAKER
-XDC2	CUSTOMER TERMINAL BLOCK FOR AUXILIARY CIRCUITS OF SWITCH-DISCONNECTOR
-XDC3	CUSTOMER TERMINAL BLOCK FOR AUXILIARY CIRCUITS OF PROTECTION RELAY AND MULTIFUNCTION UNIT
-XDC4	CUSTOMER TERMINAL BLOCK FOR AUXILIARY CIRCUITS OF VOLTAGE TRANSFORMERS
-XDC5	CUSTOMER TERMINAL BLOCK FOR AUXILIARY CIRCUITS OF MINIATURE CIRCUIT BREAKER
-XDE	TERMINAL BLOCK FOR AUXILIARY CIRCUITS OF EARTHING SWITCH -QCE
-XDE1	TERMINAL BLOCK FOR INTERNAL CIRCUITS OF EARTHING SWITCH -QCE
-XDE2	TERMINAL BLOCK FOR AUXILIARY CIRCUITS OF EARTHING SWITCH -QCE1 OR -QCE2
-XDE3	TERMINAL BLOCK FOR INTERNAL CIRCUITS OF EARTHING SWITCH -QCE1 OR -QCE2
-XDF	TERMINAL BLOCK FOR AUXILIARY CIRCUITS OF FORCED COOLING VENTILATORS
-XDF1	CONNECTOR FOR ISOLATION OF CIRCUITS OF FRONT VENTILATOR
-XDF2	CONNECTOR FOR REAR VENTILATOR CIRCUITS
-XDF3	CONNECTOR FOR FRONT VENTILATOR CIRCUITS
-XDH	TERMINAL BLOCK FOR VARIOUS CIRCUITS (HEATERS, POSITION SWITCHES DETECTING INTERNAL ARCING, ETC.)
-XDI	TERMINAL BLOCK FOR INTERCONNECTION (CONNECTION BETWEEN PANELS)
-XDI1	TERMINAL BLOCK FOR INTERCONNECTIONS OF CONTROL CIRCUITS
-XDI2	TERMINAL BLOCK FOR INTERCONNECTIONS OF CIRCUITS OF MOTOR FOR CIRCUIT-BREAKER SPRINGS CHARGING
-XDI3	TERMINAL BLOCK FOR INTERCONNECTIONS OF CIRCUITS OF MOTOR FOR SWITCH-DISCONNECTOR OPERATION
-XDI4	TERMINAL BLOCK FOR INTERCONNECTIONS OF A.C. AUXILIARY CIRCUITS
-XDI6	TERMINAL BLOCK FOR INTERCONNECTION (CONNECTION BETWEEN PANELS) OF VOLTAGE CIRCUITS
-XDI7	TERMINAL BLOCK FOR INTERCONNECTION OF MOD-BUS
-XDI8	TERMINAL BLOCK FOR INTERCONNECTIONS OF CURRENT CIRCUITS
-XDI9	TERMINAL BLOCK FOR SPECIAL USE
-XDJ	TERMINAL BLOCK FOR AUXILIARY CIRCUITS OF DISCONNECTORS -QBD
-XDJ1	TERMINAL BLOCK FOR AUXILIARY CIRCUITS OF SWITCH-DISCONNECTOR -QBS
-XDM	SEALABLE TERMINAL BLOCK FOR MEASUREMENT
-XDS	CURRENT SOCKETS
-XDT	TERMINAL BLOCK FOR POSITION CONTACTS OF TRUCK AND OF CONNECTOR -XDB
-XDU	CONNECTOR FOR ISOLATION OF CIRCUITS OF LOWER VOLTAGE TRANSFORMER TRUCK
-XDU1	TERMINAL BLOCK FOR CIRCUITS OF LOWER VOLTAGE TRANSFORMER TRUCK
-XDV	TERMINAL BLOCK FOR CIRCUITS OF VOLTAGE TRANSFORMERS
-XDV1	CONNECTOR FOR CIRCUITS OF VOLTAGE TRANSFORMERS LOCATED ON PHASE L1
-XDV2	CONNECTOR FOR CIRCUITS OF VOLTAGE TRANSFORMERS LOCATED ON PHASE L2
-XDV3	CONNECTOR FOR CIRCUITS OF VOLTAGE TRANSFORMERS LOCATED ON PHASE L3
-XDV4	CONNECTOR FOR CIRCUITS OF ANTIFERRORESONANCE RESISTOR
-XDX	SUPPORT TERMINAL BLOCK
-XE1	EARTHING TERMINAL BLOCKS FOR LV COMPARTMENT, LEFT SIDE
-XE2	EARTHING TERMINAL BLOCKS FOR LV COMPARTMENT, RIGHT SIDE
-XE5	EARTHING TERMINAL BLOCKS FOR MV COMPARTMENT, VOLTAGE INDICATOR SIDE
-XE6	EARTHING TERMINAL BLOCKS FOR MV COMPARTMENT, REAR BOTTOM SIDE
-XE7	EARTHING TERMINAL BLOCKS FOR MV COMPARTMENT, LEFT SIDE
-XE8	EARTHING TERMINAL BLOCKS FOR MV COMPARTMENT, FRONT BOTTOM SIDE
-XE9	EARTHING TERMINAL BLOCK FOR TRANSFORMERS IN BUSBAR COMPARTMENT

WE RESERVE ALL RIGHTS IN THIS DOCUMENT AND IN THE INFORMATION CONTAINED THEREIN. REPRODUCTION, USE OR DISCLOSURE TO THIRD PARTIES WITHOUT EXPESS AUTHORITY IS STRICTLY FORBIDDEN.

Ind.	Revision	Date	Name		
				Date Prep.	26.03.2020
				Prepared	YR
00	Issued for Approval	26.03.20	YR	Checked	AW
				Approved	AI

PROJECT TITLE
BIODIESEL AND FLEXTECH PLANT
Based on: BE320003

ABB EPMV
PT. ABB Sakti Industri

REFERENCE DESIGNATIONS
BIODIESEL PLANT
SCHEMATIC DIAGRAM
SBC-W INCOMING 2

Scale	NTS	= H02
Customer	PT Multimas Nabati Asahan	& 302
Drawing Nbr.	20.003-MNA-302	Sh. 6
Customer Doc. Nbr.		Cont. 29

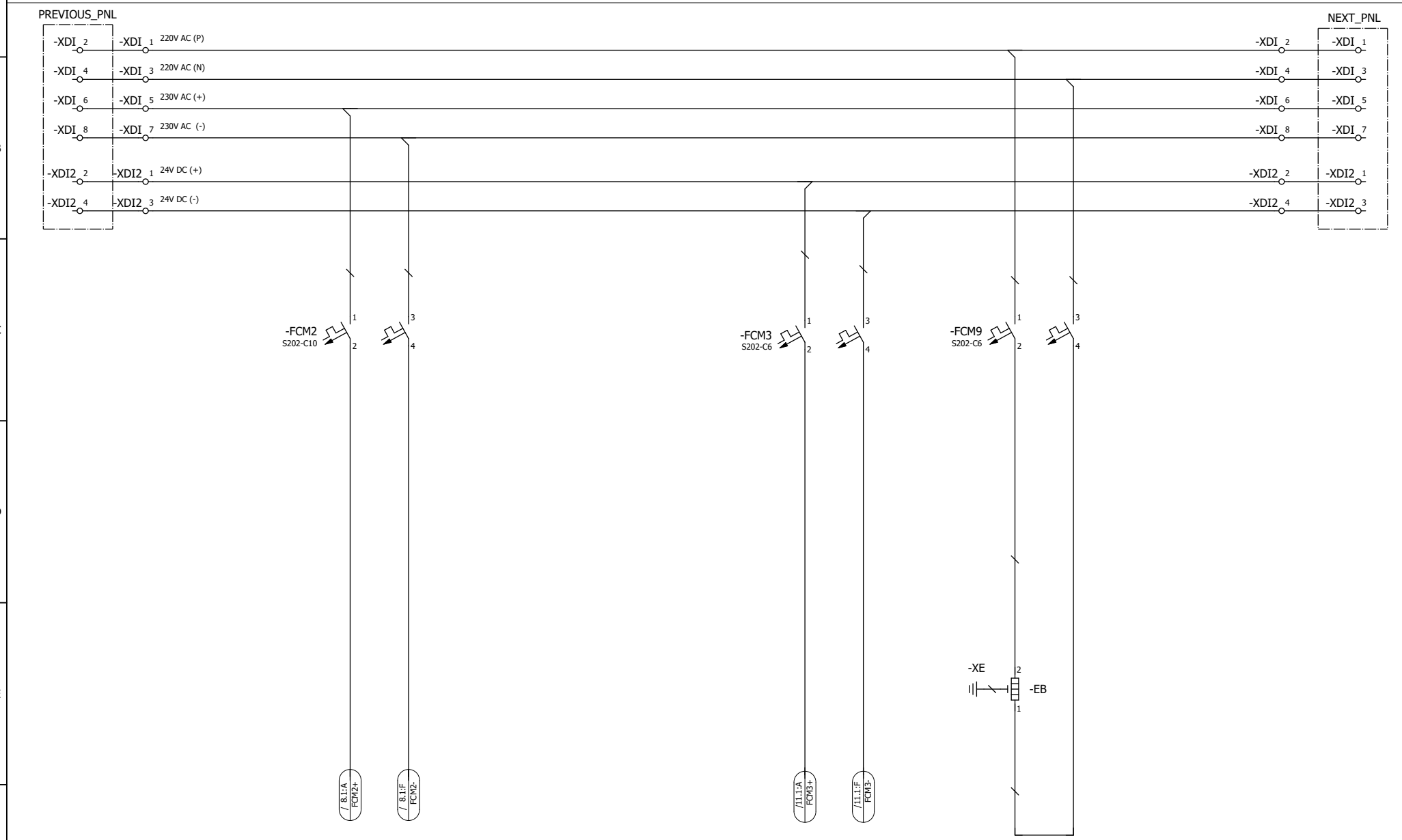

				Date Prep.	26.03.2020	PROJECT TITLE	ABB EPMV	DISTRIBUTION OF AUXILIARY CIRCUITS	Scale	NTS	= H02
				Prepared	YR	BIODIESEL AND FLEXTECH PLANT		BIODIESEL PLANT	Customer	PT Multimas Nabati Asahan	& 302
00	Issued for Approval	26.03.20	YR	Checked	AW		PT. ABB Sakti Industri	SCHEMATIC DIAGRAM	Drawing Nbr.	20.003-MNA-302	Sh. 7
Ind.	Revision	Date	Name	Approved	AI	Based on: BE320003		SBC-W INCOMING 2	Customer Doc. Nbr.		Cont. 29

WE RESERVE ALL RIGHTS IN THIS DOCUMENT AND IN THE INFORMATION CONTAINED THEREIN. REPRODUCTION, USE OR DISCLOSURE TO THIRD PARTIES WITHOUT EXPESS AUTHORITY IS STRICTLY FORBIDDEN.

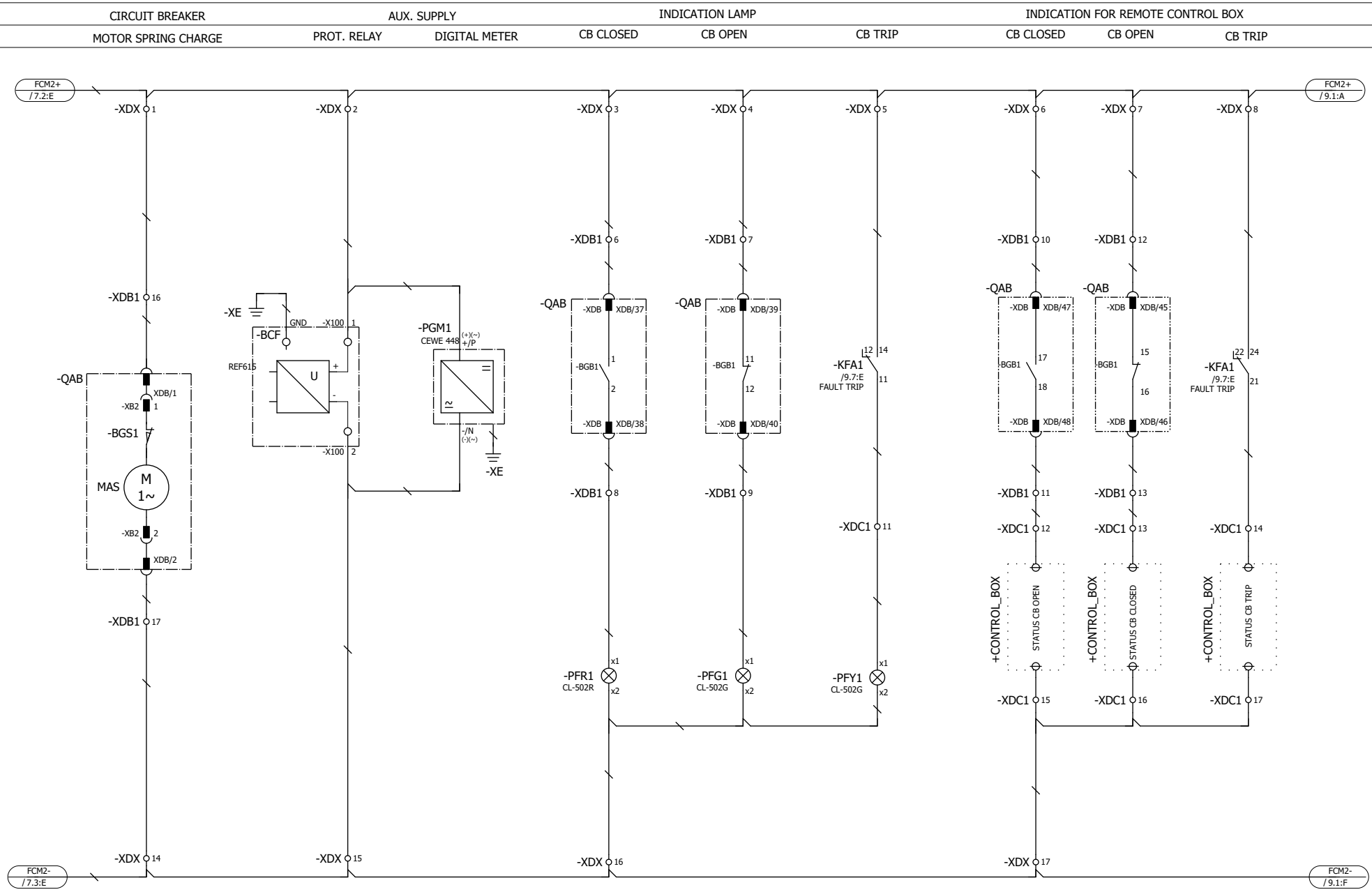

				Date Prep.	26.03.2020	PROJECT TITLE				Scale	NTS	= H02
				Prepared	YR	BIODIESEL AND FLEXTECH PLANT	ABB EPMV	AUXILIARY CIRCUIT BIODIESEL PLANT SCHEMATIC DIAGRAM SBC-W INCOMING 2		Customer	PT Multimas Nabati Asahan	& 302
00	Issued for Approval	26.03.20	YR	Checked	AW		PT. ABB Sakti Industri			Drawing Nbr.	20.003-MNA-302	Sh. 8
Ind.	Revision	Date	Name	Approved	AI	Based on: BE320003				Customer Doc. Nbr.		Cont. 29

WE RESERVE ALL RIGHTS IN THIS DOCUMENT AND IN THE INFORMATION CONTAINED THEREIN. REPRODUCTION, USE OR DISCLOSURE TO THIRD PARTIES WITHOUT EXPESS AUTHORITY IS STRICTLY FORBIDDEN.

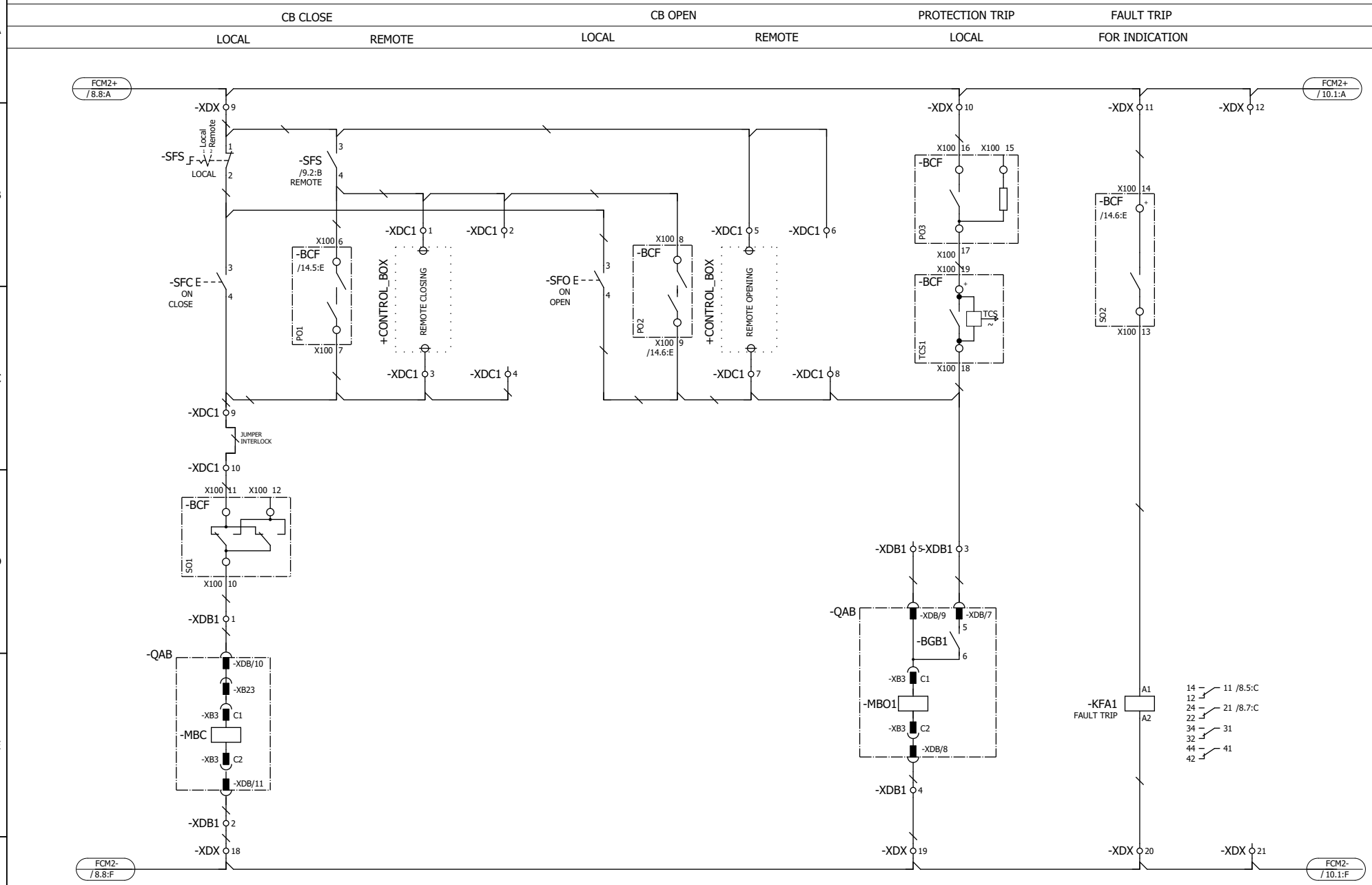

				Date Prep.	26.03.2020	PROJECT TITLE	ABB EPMV	CIRCUIT BREAKER CONTROL	Scale	NTS	= H02
				Prepared	YR	BIODIESEL AND FLEXTECH PLANT		BIODIESEL PLANT	Customer	PT Multimas Nabati Asahan	& 302
00	Issued for Approval	26.03.20	YR	Checked	AW		PT. ABB Sakti Industri	SCHEMATIC DIAGRAM	Drawing Nbr.	20.003-MNA-302	Sh. 9
Ind.	Revision	Date	Name	Approved	AI	Based on: BE320003		SBC-W INCOMING 2	Customer Doc. Nbr.		Cont. 29

WE RESERVE ALL RIGHTS IN THIS DOCUMENT AND IN THE INFORMATION CONTAINED THEREIN. REPRODUCTION, USE OR DISCLOSURE TO THIRD PARTIES WITHOUT EXPESS AUTHORITY IS STRICTLY FORBIDDEN.

WE RESERVE ALL RIGHTS IN THIS DOCUMENT AND IN THE INFORMATION CONTAINED THEREIN. REPRODUCTION, USE OR DISCLOSURE TO THIRD PARTIES WITHOUT EXPESS AUTHORITY IS STRICTLY FORBIDDEN.

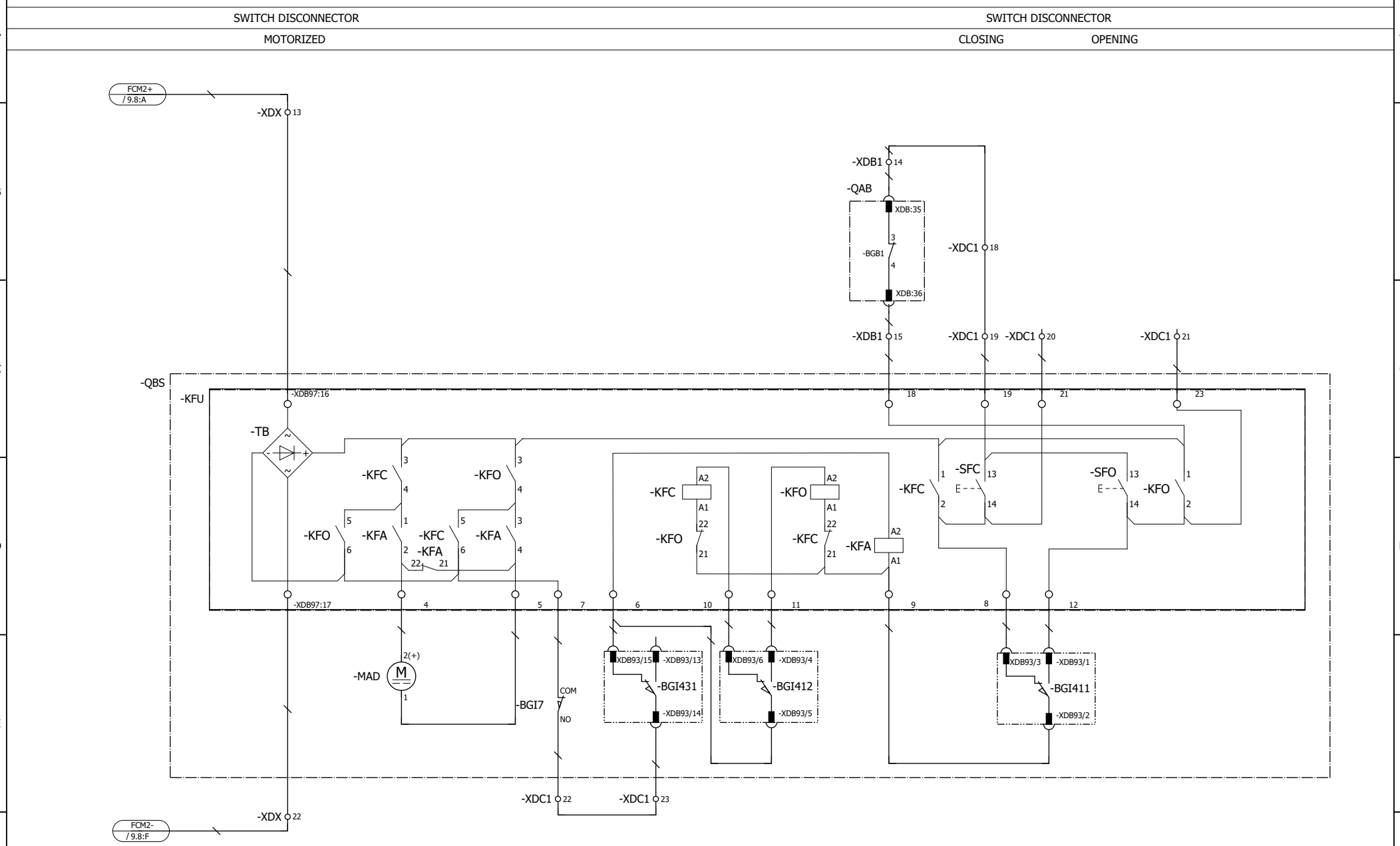

				Date Prep.	26.03.2020	PROJECT TITLE	ABB EPMV	AUXILIARY MOTOR & RELAY	Scale	NTS	= H02
				Prepared	YR	BIODIESEL AND FLEXTECH PLANT		BIODIESEL PLANT	Customer	PT Multimas Nabati Asahan	& 302
00	Issued for Approval	26.03.20	YR	Checked	AW		PT. ABB Sakti Industri	SCHEMATIC DIAGRAM	Drawing Nbr.	20.003-MNA-302	Sh. 10
Ind.	Revision	Date	Name	Approved	AI	Based on: BE320003		SBC-W INCOMING 2	Customer Doc. Nbr.		Cont. 29

CIRCUIT BREAKER	CIRCUIT BREAKER	LBS	EARTHING SWITCH	REF615 BINARY INPUTS
CLOSED	CB SPRING CHARGED	CLOSED	OPEN	SPARE DIGITAL INPUT

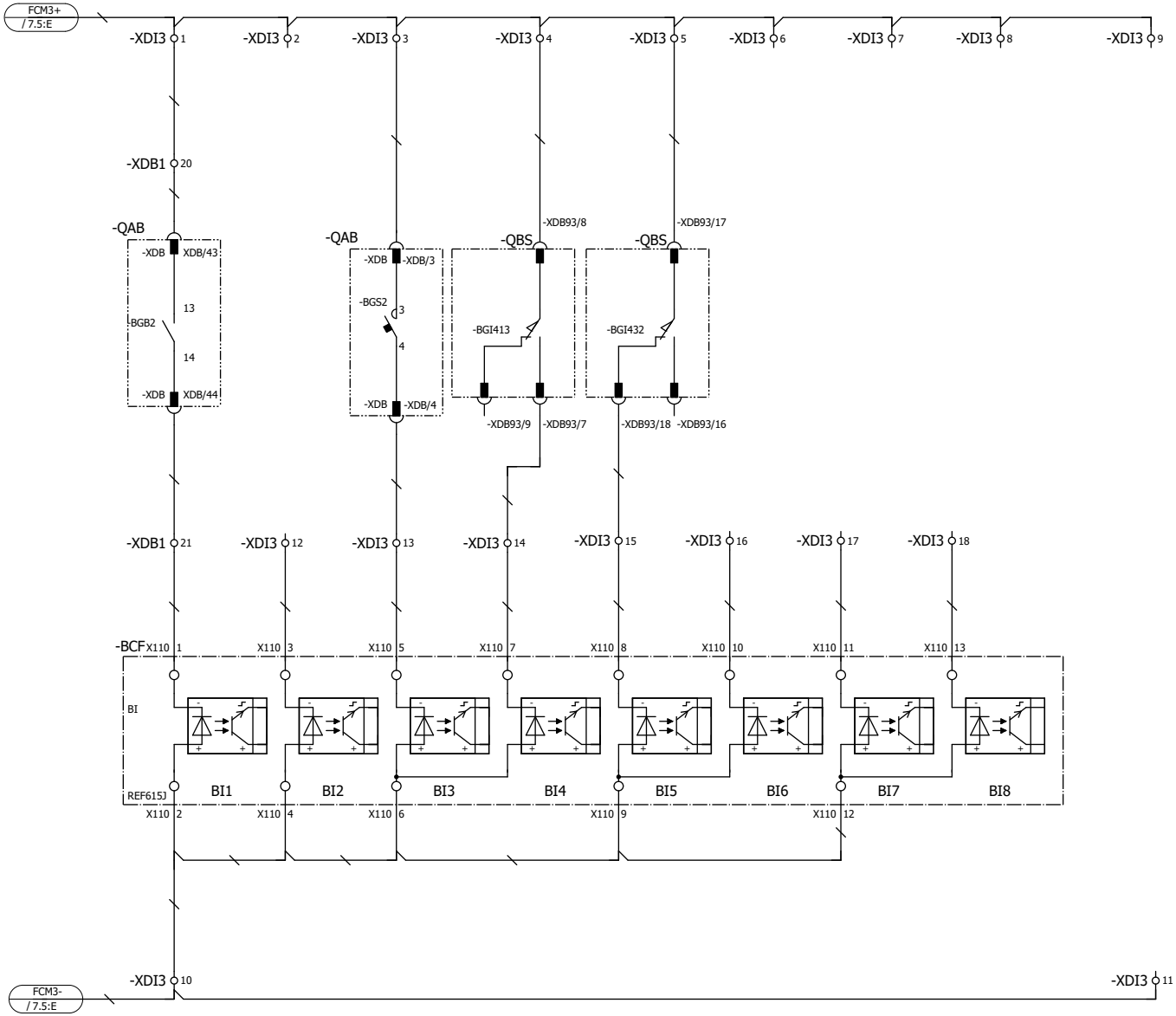

Ind.	Revision	Date	Name		
				Date Prep.	26.03.2020
				Prepared	YR
00	Issued for Approval	26.03.20	YR	Checked	AW
				Approved	AI

PROJECT TITLE

BIODIESEL AND FLEXTECH PLANT

Based on: BE320003

ABB EPMV

PT. ABB Sakti Industri

DIGITAL INPUT/OUPUT RELAY
BIODIESEL PLANT
SCHEMATIC DIAGRAM
SBC-W INCOMING 2

Scale	NTS	= H02
Customer	PT Multimas Nabati Asahan	& 302
Drawing Nbr.	20.003-MNA-302	Sh. 11
Customer Doc. Nbr.		Cont. 29

WE RESERVE ALL RIGHTS IN THIS DOCUMENT AND IN THE INFORMATION CONTAINED THEREIN. REPRODUCTION, USE OR DISCLOSURE TO THIRD PARTIES WITHOUT EXPESS AUTHORITY IS STRICTLY FORBIDDEN.

SPARE AUXILIARY CONTACT CB		SWITCH DISCONNECTOR IN LINE POSITION	SWITCH DISCONNECTOR IN EARTHED POSITION
CB CLOSED	CB OPEN	OPEN CLOSED	OPEN CLOSED

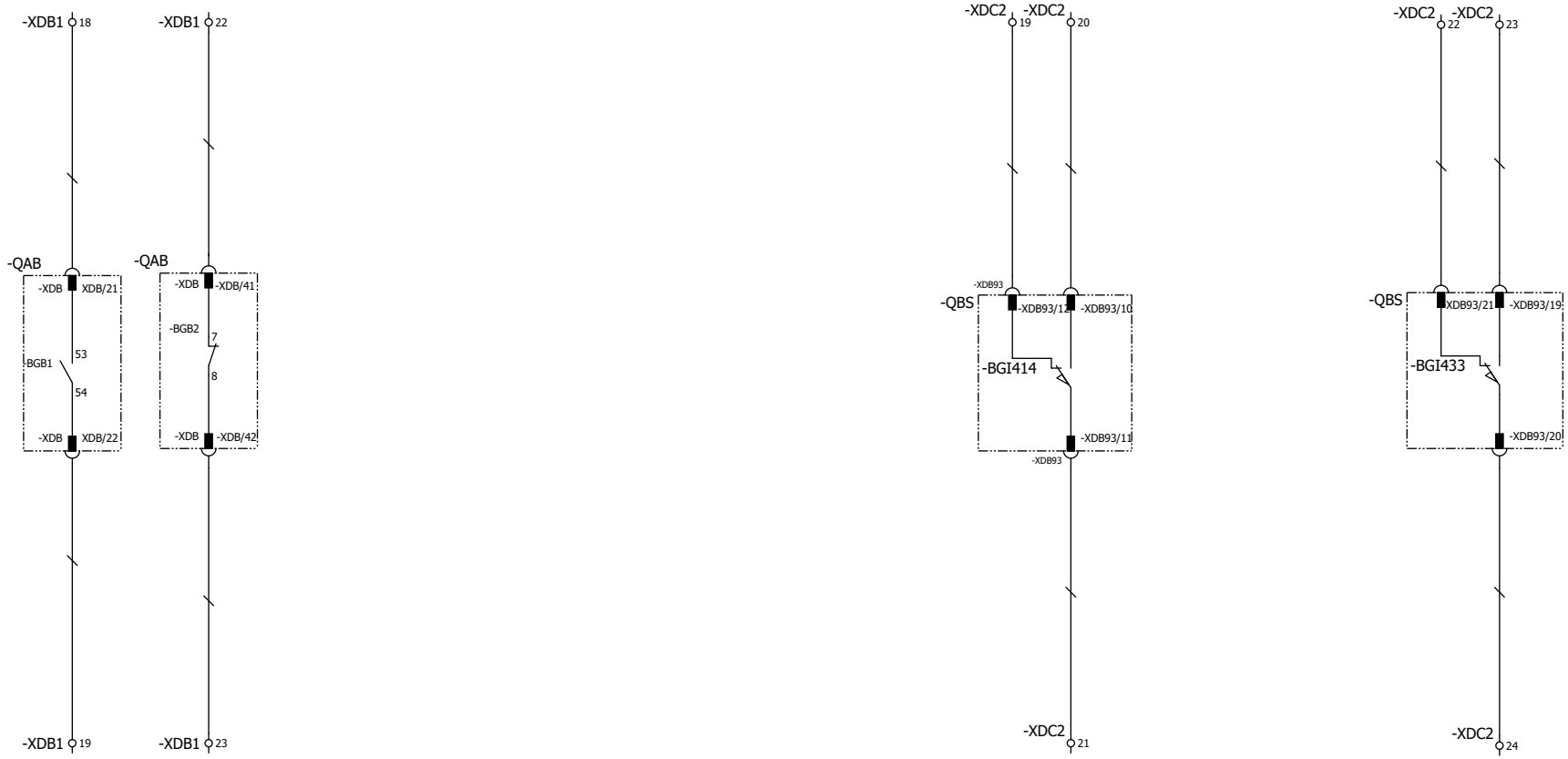

Ind.	Revision	Date	Name			
				Date Prep.	26.03.2020	PROJECT TITLE
				Prepared	YR	BIODIESEL AND FLEXTECH PLANT
00	Issued for Approval	26.03.20	YR	Checked	AW	
				Approved	AI	Based on: BE320003

ABB EPMV

PT. ABB Sakti Industri

SPARE CONTACT
BIODIESEL PLANT
SCHEMATIC DIAGRAM
SBC-W INCOMING 2

Scale	NTS	= H02
Customer	PT Multimas Nabati Asahan	& 302
Drawing Nbr.	20.003-MNA-302	Sh. 12
Customer Doc. Nbr.		Cont. 29

WE RESERVE ALL RIGHTS IN THIS DOCUMENT AND IN THE INFORMATION CONTAINED THEREIN. REPRODUCTION, USE OR DISCLOSURE TO THIRD PARTIES WITHOUT EXPESS AUTHORITY IS STRICTLY FORBIDDEN.

BINARY OUTPUTS REF615 | SELECTOR SWITCH

INTERNAL RELAY FAULT (IRF) | AVAILABLE OUTPUT | REMOTE

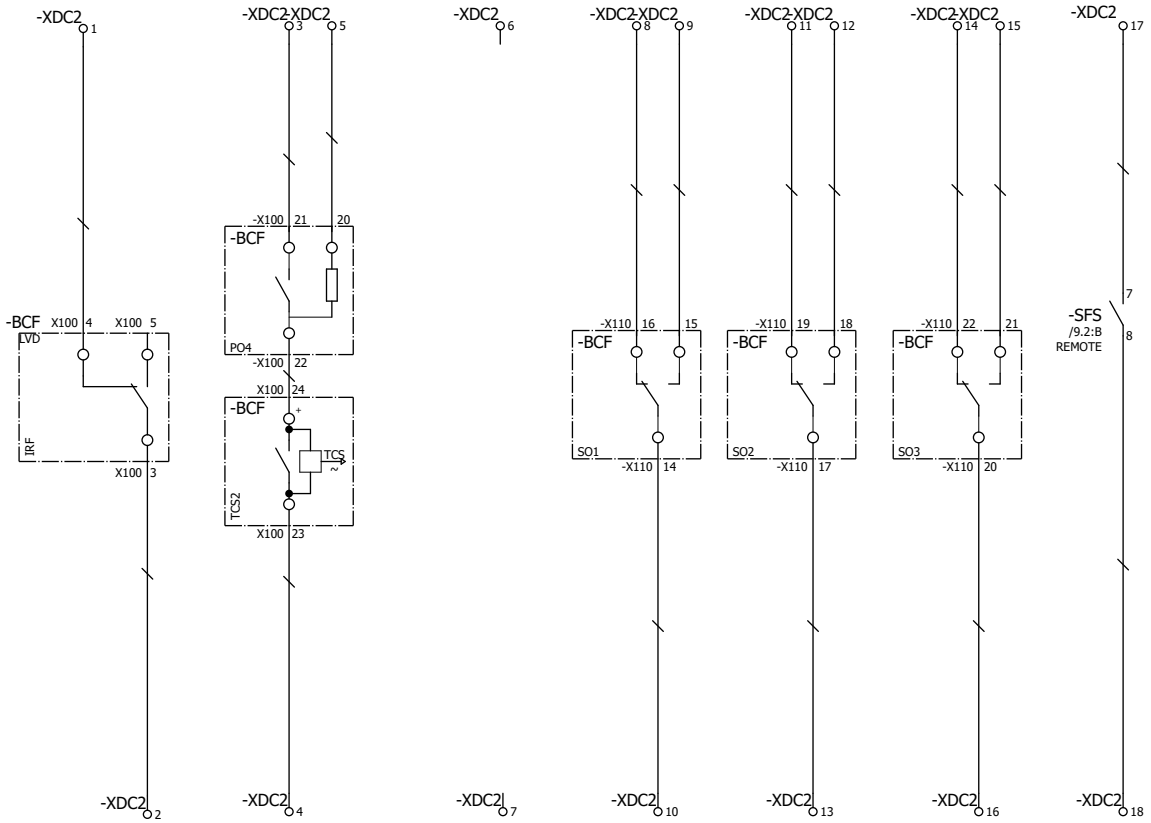

				Date Prep.	26.03.2020	PROJECT TITLE	ABB EPMV	SPARE CONTACT	Scale	NTS	= H02
				Prepared	YR	BIODIESEL AND FLEXTECH PLANT		BIODIESEL PLANT	Customer	PT Multimas Nabati Asahan	& 302
00	Issued for Approval	26.03.20	YR	Checked	AW		PT. ABB Sakti Industri	SCHEMATIC DIAGRAM	Drawing Nbr.	20.003-MNA-302	Sh. 13
Ind.	Revision	Date	Name	Approved	AI	Based on: BE320003		SBC-W INCOMING 2	Customer Doc. Nbr.		Cont. 29

WE RESERVE ALL RIGHTS IN THIS DOCUMENT AND IN THE INFORMATION CONTAINED THEREIN. REPRODUCTION, USE OR DISCLOSURE TO THIRD PARTIES WITHOUT EXPESS AUTHORITY IS STRICTLY FORBIDDEN.

PANEL NO.	CT RATIO	LOW/HIGH RATIO CONNECTED
H02	(300)-600/5-5A	LOW

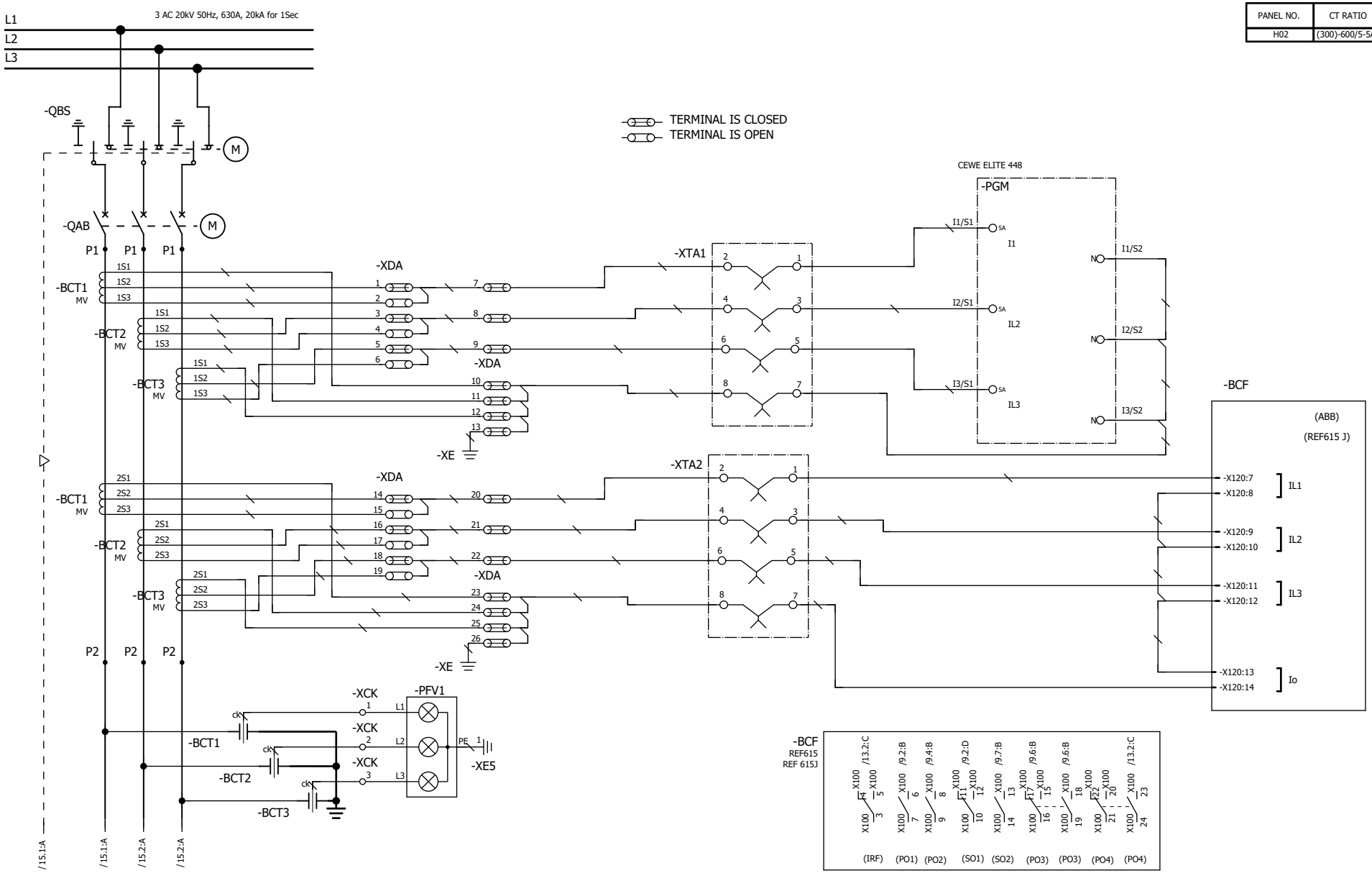

Ind.	Revision	Date	Name			
				Date Prep.	26.03.2020	
				Prepared	YR	
00	Issued for Approval	26.03.20	YR	Checked	AW	
				Approved	AI	

PROJECT TITLE

BIODIESEL AND FLEXTECH PLANT

Based on: BE320003

ABB EPMV

PT. ABB Sakti Industri

CURRENT TRANSFOMER
BIODIESEL PLANT
SCHEMATIC DIAGRAM
SBC-W INCOMING 2

Scale	NTS	= H02
Customer	PT Multimas Nabati Asahan	& 302
Drawing Nbr.	20.003-MNA-302	Sh. 14
Customer Doc. Nbr.		Cont. 29

WE RESERVE ALL RIGHTS IN THIS DOCUMENT AND IN THE INFORMATION CONTAINED THEREIN. REPRODUCTION, USE OR DISCLOSURE TO THIRD PARTIES WITHOUT EXPESS AUTHORITY IS STRICTLY FORBIDDEN.

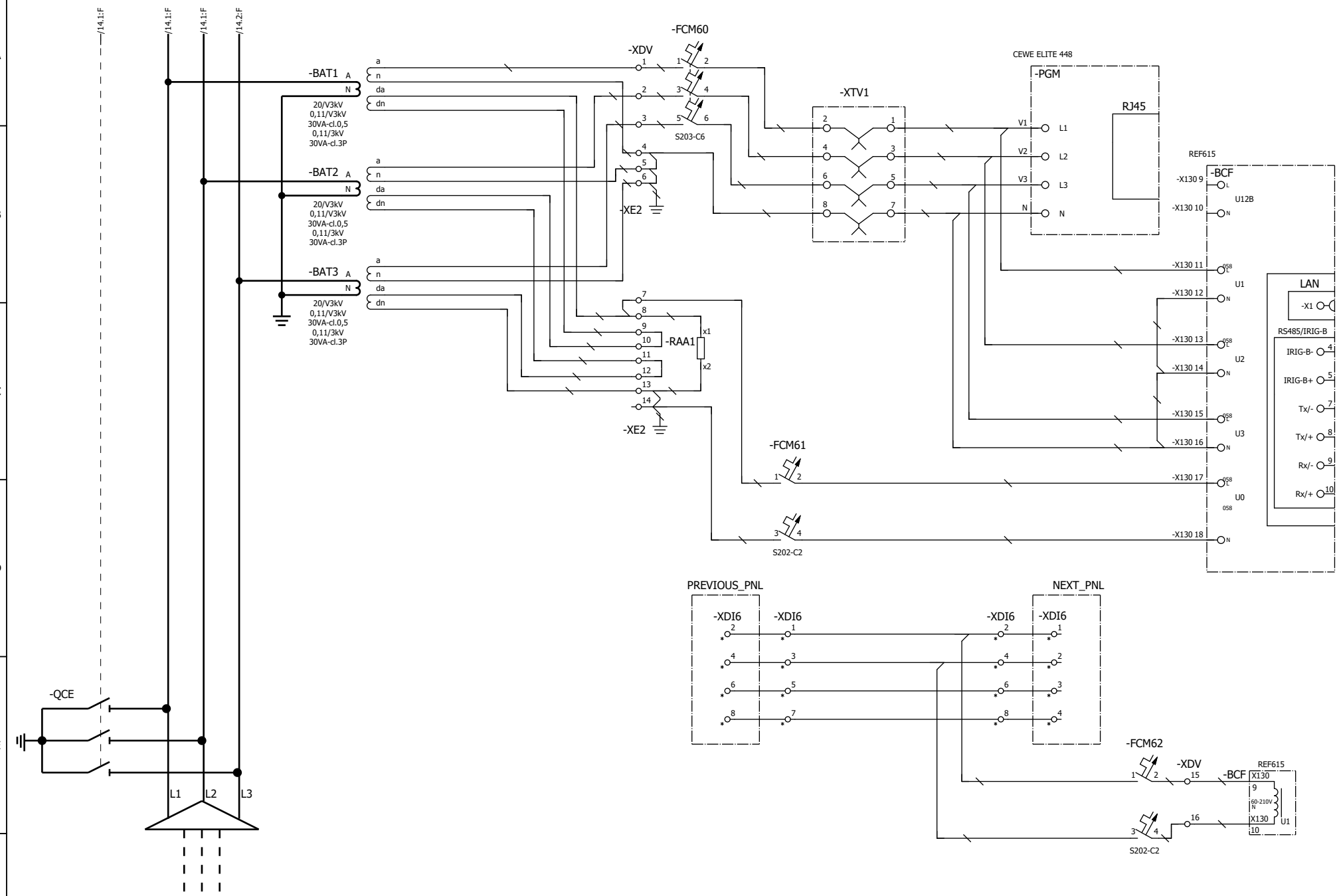

				Date Prep.	26.03.2020	PROJECT TITLE	ABB EPMV	VOLTAGE TRANSFORMER BIODIESEL PLANT SCHEMATIC DIAGRAM SBC-W INCOMING 2	Scale	NTS	= H02
				Prepared	YR	BIODIESEL AND FLEXTECH PLANT			Customer	PT Multimas Nabati Asahan	& 302
00	Issued for Approval	26.03.20	YR	Checked	AW		PT. ABB Sakti Industri		Drawing Nbr.	20.003-MNA-302	Sh. 15
Ind.	Revision	Date	Name	Approved	AI	Based on: BE320003			Customer Doc. Nbr.		Cont. 29

WE RESERVE ALL RIGHTS IN THIS DOCUMENT AND IN THE INFORMATION CONTAINED THEREIN. REPRODUCTION, USE OR DISCLOSURE TO THIRD PARTIES WITHOUT EXPESS AUTHORITY IS STRICTLY FORBIDDEN.

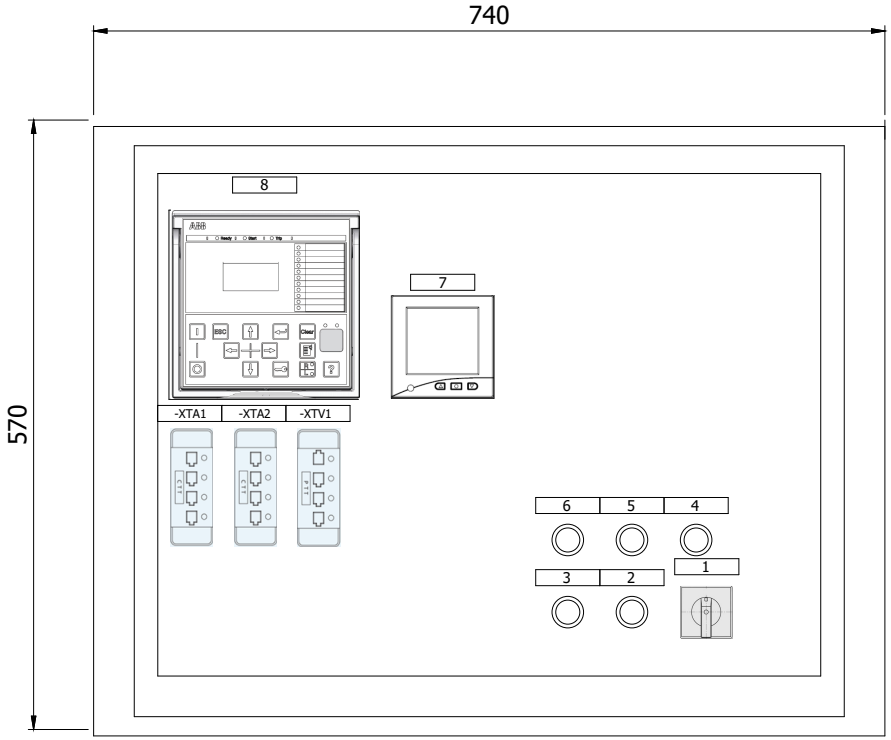

No.	EQUIPMENT DESCRIPTION	ENGRAVING
1	-SFS (LOCAL-REMOTE SELECTOR SWITCH, K&N)	-SFS, LOCAL-REMOTE
2	-SFC (PUSH BUTTON CB CLOSE, GREEN, ABB)	-SFC, CB CLOSE
3	-SFO (PUSH BUTTON CB OPEN, RED, ABB)	-SFO, CB OPEN
4	-PFY1 (LAMP INDICATION FOR CB TRIP, YELLOW, ABB)	-PFY1, CB TRIP
5	-PFR1 (LAMP INDICATION FOR CB CLOSE, RED, ABB)	-PFR1, CB CLOSE
6	-PFG1 (LAMP INDICATION FOR CB OPEN, GREEN, ABB)	-PFG1, CB OPEN
7	-PGM (DIGITAL MEASUREMENT, CEWE 448)	-PGM, DIGITAL MEASUREMENT
8	-BCF (FEEDER PROTECTION RELAY, REF615J, ABB)	-BCF, RELAY PROTECTION
9	-XTA1, XTA2 (TEST BLOCK , YONGSUNG)	-XTA, CURRENT TEST BLOCK
10	-XTV1 (TEST BLOCK , YONGSUNG)	-XTV, VOLTAGE TEST BLOCK

CUT OUT DIMENSION (in mm)

REF 615/REF 611

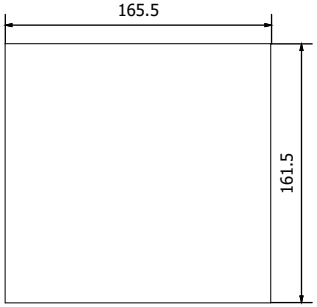

CEWE 448

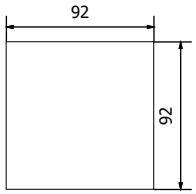

SELECTOR SWITCH

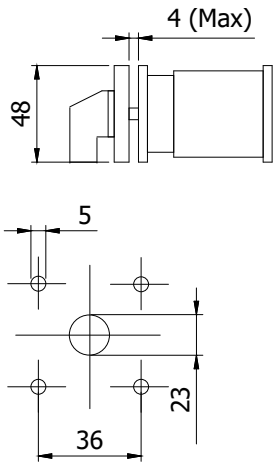

PILOT LAMP

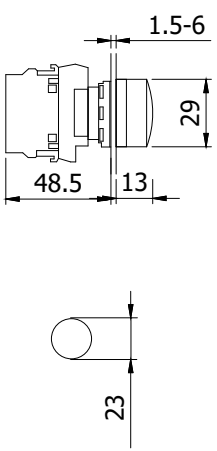

PUSH BUTTON

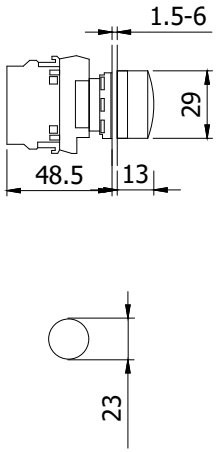

TEST BLOCK

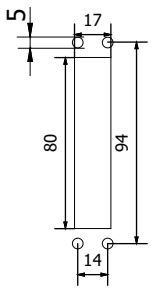

Ind.	Revision	Date	Name		
				Date Prep.	26.03.2020
				Prepared	YR
00	Issued for Approval	26.03.20	YR	Checked	AW
				Approved	AI

PROJECT TITLE

BIODIESEL AND FLEXTECH PLANT

Based on: BE320003

ABB EPMV

PT. ABB Sakti Industri

LV DOOR LAYOUT
BIODIESEL PLANT
SCHEMATIC DIAGRAM
SBC-W INCOMING 2

Scale	NTS	= H02
Customer	PT Multimas Nabati Asahan	& 302
Drawing Nbr.	20.003-MNA-302	Sh. 16
Customer Doc. Nbr.		Cont. 29

WE RESERVE ALL RIGHTS IN THIS DOCUMENT AND IN THE INFORMATION CONTAINED THEREIN. REPRODUCTION, USE OR DISCLOSURE TO THIRD PARTIES WITHOUT EXPESS AUTHORITY IS STRICTLY FORBIDDEN.

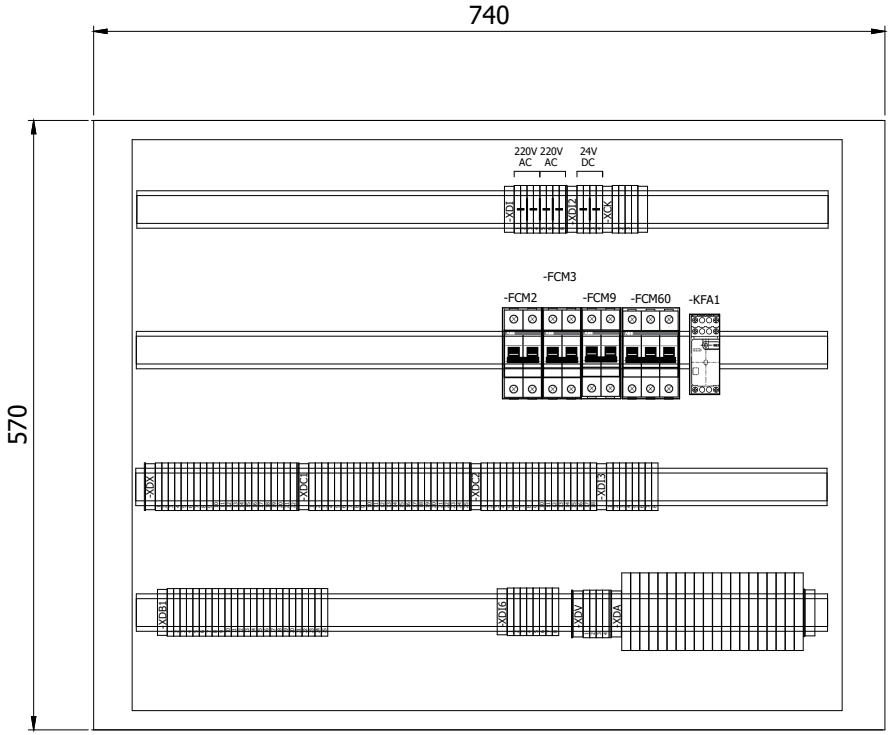

No.	EQUIPMENT DESCRIPTION	ENGRAVING
1	-FCM2 (MCB 2P, 10A, S202-C10, ABB)	-FCM2, FOR PROTECTION & CONTROL
2	-FCM3 (MCB 2P,6A, S202-C6, ABB)	-FCM3, FOR AUXILIARY SUPPLY 24VDC
3	-FCM9 (MCB 2P, 6A, S202-C6, ABB)	-FCM9, FOR SPACE HEATER
4	-FCM60 (MCB 3P, S203-C6, ABB)	-FCM60, FOR VOLTAGE TRANSFOMER
5	-FCM61 (MCB 2P, S203-C2, ABB)	-FCM61, FOR RESIDUAL VOLTAGE
6	-KFA1 (AUX RELAY, REL-IR4/L, PHOENIX)	-KFAI, FOR TRIP FAULT

Ind.	Revision	Date	Name			
				Date Prep.	26.03.2020	PROJECT TITLE
				Prepared	YR	BIODIESEL AND FLEXTECH PLANT
00	Issued for Approval	26.03.20	YR	Checked	AW	
				Approved	AI	Based on: BE320003

ABB EPMV

PT. ABB Sakti Industri

LV BOX LAYOUT
BIODIESEL PLANT
SCHEMATIC DIAGRAM
SBC-W INCOMING 2

Scale	NTS	= H02
Customer	PT Multimas Nabati Asahan	& 302
Drawing Nbr.	20.003-MNA-302	Sh. 17
Customer Doc. Nbr.		Cont. 29

WE RESERVE ALL RIGHTS IN THIS DOCUMENT AND IN THE INFORMATION CONTAINED THEREIN. REPRODUCTION, USE OR DISCLOSURE TO THIRD PARTIES WITHOUT EXPESS AUTHORITY IS STRICTLY FORBIDDEN.

Summarized parts list

IDABB_F02_005-IDABB

Carry over: 0.00

TAG ID	DESCRIPTION	MANUFACTUR/BRAND	PART NUMBER	QUANTITY	REMARKS
-BCF	Feeder Management Relay HBFJAEAGABC1ANA11G	ABB	REF615J HBFJAEAGABC1ANA11G	2	/8.2:C;/15.7:B
-EB	HEATER 230VAC, 50W	SANYANG	CDXN010033P0009	1	/7.6:E
-FCM2	MCB S202-C10 MCB. 2P, 10A	ABB	2CDS252001R0104	1	/7.2:C
-FCM3;-FCM9	MCB S202-C6 MCB. 2P, 6A	ABB	2CDS252001R0064	2	/7.5:C;/7.6:C
-FCM60	MCB S203-C6 MCB. 3P, 6A	ABB	2CDS253001R0064	1	/15.4:A
-FCM61;-FCM62	MCB S202-C2 MCB. 2P, 2A	ABB	2CDS252001R0024	2	/15.5:D;/15.7:E
-KFA1	Auxiliary Relay 230AC 4COS	PHOENIX	1YRA3DL266230001	1	/9.7:E
-PFG1	PILOT LIGHT GREEN #CL-523G#230VAC CL-523G	ABB	1SFA619402R5232	1	/8.5:E
-PFR1	PILOT LIGHT RED #CL-523R#230VAC CL-523R	ABB	1SFA619402R5231	1	/8.4:E
-PFY1	PILOT LIGHT YELLOW #CL-523Y#230VAC CL-523Y	ABB	1SFA619402R5233	1	/8.6:E
-PGM1	POWER METER CEWE 448 Class : 0.5s; CT Input : 1A; VT Input : 57.7-240V (L-N); Aux. Voltage: 80-300VAC/DC	CEWE	1YRA4EA0350001	1	/8.3:C
-SFC	PUSH BUTTON, CP1-10G-11,1NC+1NO GREEN COLOUR	ABB	1SFA619100R1072	1	/9.2:B
-SFO	PUSH BUTTON, CP1-10R-11,1NC+1NO RED COLOUR	ABB	1SFA619100R1071	1	/9.4:B
-SFS	LOCAL/REMOTE Selector Switch Type : S0-CA10-A721-600-FT2; Contact : 2NC & 2NO; Mounting Type : FT2	K&N	1YRA3DA17900201	1	/9.2:B
-XTA1;-XTA2	Current Test Block Rated Current : 10A, 250V; Mounting : Flush Mounting	YONGSUNG	YSCTT-04C	2	/14.4:B;/14.4:D
-XTV1	Voltage Test Block Rated Current : 10A, 250V; Mounting : Flush Mounting	YONGSUNG	YSPTT-04C	1	/15.5:A

Ind.	Revision	Date	Name		
				Date Prep.	26.03.2020
				Prepared	YR
00	Issued for Approval	26.03.20	YR	Checked	AW
				Approved	AI

PROJECT TITLE
BIODIESEL AND FLEXTECH PLANT

Based on: BE320003

ABB EPMV
PT. ABB Sakti Industri

PART LIST
BIODIESEL PLANT
SCHEMATIC DIAGRAM
SBC-W INCOMING 2

Scale	NTS	= H02
Customer	PT Multimas Nabati Asahan	& 302
Drawing Nbr.	20.003-MNA-302	Sh. 18
Customer Doc. Nbr.		Cont. 29

WE RESERVE ALL RIGHTS IN THIS DOCUMENT AND IN THE INFORMATION CONTAINED THEREIN. REPRODUCTION, USE OR DISCLOSURE TO THIRD PARTIES WITHOUT EXPESS AUTHORITY IS STRICTLY FORBIDDEN.

WE RESERVE ALL RIGHTS IN THIS DOCUMENT AND IN THE INFORMATION CONTAINED THEREIN. REPRODUCTION, USE OR DISCLOSURE TO THIRD PARTIES WITHOUT EXPESS AUTHORITY IS STRICTLY FORBIDDEN.

XCK

REMARK	CABLE	EQUIPMENT	WIRE NO.	TYPE	Terminal number	Wire No	EQUIPMENT	CABLE	REMARK
				PT 2.5	1		-PFV1:L1		
				PT 2.5	1				
				PT 2.5	2		-PFV1:L2		
				PT 2.5	2				
				PT 2.5	3		-PFV1:L3		
				PT 2.5	3				

REMARK: ☆ INTERPANEL LIGHT BUS,OFFERED TOGETHER WITH PANELS.
△ OUTGOING CONTROL CABLE (Supply by Customer).
BRIDGE BAR.
✕ PARTITION PLATE.
(TEST JUMPER.

Ind.	Revision	Date	Name		
				Date Prep.	26.03.2020
				Prepared	YR
00	Issued for Approval	26.03.20	YR	Checked	AW
				Approved	AI

PROJECT TITLE
BIODIESEL AND FLEXTECH PLANT
Based on: BE320003

ABB EPMV
PT. ABB Sakti Industri

Terminal diagram
BIODIESEL PLANT
SCHEMATIC DIAGRAM
SBC-W INCOMING 2

Scale		= H02
Customer	PT Multimas Nabati Asahan	& 302
Drawing Nbr.	20.003-MNA-302	Sh. 19
Customer Doc. Nbr.		Cont. 29

WE RESERVE ALL RIGHTS IN THIS DOCUMENT AND IN THE INFORMATION CONTAINED THEREIN. REPRODUCTION, USE OR DISCLOSURE TO THIRD PARTIES WITHOUT EXPESS AUTHORITY IS STRICTLY FORBIDDEN.

XDA

REMARK	CABLE	EQUIPMENT	Wire No	Terminal number	TYPE	WIRE NO.	EQUIPMENT	CABLE	REMARK
BLACK 2,5 mm²		-XDA:7		1	UT 6-T-HV P/P		-BCT1:1S2		BLACK 2,5 mm²
				2	UT 6-T-HV P/P		-BCT1:1S3		BLACK 2,5 mm²
BLACK 2,5 mm²		-XDA:8		3	UT 6-T-HV P/P		-BCT2:1S2		BLACK 2,5 mm²
				4	UT 6-T-HV P/P		-BCT2:1S3		BLACK 2,5 mm²
BLACK 2,5 mm²		-XDA:9		5	UT 6-T-HV P/P		-BCT3:1S2		BLACK 2,5 mm²
				6	UT 6-T-HV P/P		-BCT3:1S3		BLACK 2,5 mm²
BLACK 2,5 mm²		-XTA1:2		7	UT 6-T-HV P/P		-XDA:1		BLACK 2,5 mm²
BLACK 2,5 mm²		-XTA1:4		8	UT 6-T-HV P/P		-XDA:3		BLACK 2,5 mm²
BLACK 2,5 mm²		-XTA1:6		9	UT 6-T-HV P/P		-XDA:5		BLACK 2,5 mm²
BLACK 2,5 mm²		-XTA1:8		10	UT 6-T-HV P/P		-BCT1:1S1		BLACK 2,5 mm²
				11	UT 6-T-HV P/P		-BCT2:1S1		BLACK 2,5 mm²
				12	UT 6-T-HV P/P		-BCT3:1S1		BLACK 2,5 mm²
				13	UT 6-T-HV P/P		-XE		Y/G 2,5 mm²
BLACK 2,5 mm²		-XDA:20		14	UT 6-T-HV P/P		-BCT1:2S2		BLACK 2,5 mm²
				15	UT 6-T-HV P/P		-BCT1:2S3		BLACK 2,5 mm²
BLACK 2,5 mm²		-XDA:21		16	UT 6-T-HV P/P		-BCT2:2S2		BLACK 2,5 mm²
				17	UT 6-T-HV P/P		-BCT2:2S3		BLACK 2,5 mm²
BLACK 2,5 mm²		-XDA:22		18	UT 6-T-HV P/P		-BCT3:2S2		BLACK 2,5 mm²
				19	UT 6-T-HV P/P		-BCT3:2S3		BLACK 2,5 mm²
BLACK 2,5 mm²		-XTA2:2		20	UT 6-T-HV P/P		-XDA:14		BLACK 2,5 mm²
BLACK 2,5 mm²		-XTA2:4		21	UT 6-T-HV P/P		-XDA:16		BLACK 2,5 mm²
BLACK 2,5 mm²		-XTA2:6		22	UT 6-T-HV P/P		-XDA:18		BLACK 2,5 mm²
BLACK 2,5 mm²		-XTA2:8		23	UT 6-T-HV P/P		-BCT1:2S1		BLACK 2,5 mm²
				24	UT 6-T-HV P/P		-BCT2:2S1		BLACK 2,5 mm²
				25	UT 6-T-HV P/P		-BCT3:2S1		BLACK 2,5 mm²
				26	UT 6-T-HV P/P		-XE		Y/G 2,5 mm²

REMARK: ☆ INTERPANEL LIGHT BUS,OFFERED TOGETHER WITH PANELS.

△ OUTGOING CONTROL CABLE (Supply by Customer).

BRIDGE BAR.

✕ PARTITION PLATE.

(TEST JUMPER.

Ind.	Revision	Date	Name	Approved	Based on:
00	Issued for Approval	26.03.20	YR	AI	BE320003

	Name	Date Prep.
Prepared	YR	26.03.2020
Checked	AW	

PROJECT TITLE
BIODIESEL AND FLEXTECH PLANT

ABB EPMV

PT. ABB Sakti Industri

Terminal diagram
BIODIESEL PLANT
SCHEMATIC DIAGRAM
SBC-W INCOMING 2

Scale
Customer: PT Multimas Nabati Asahan
Drawing Nbr.: 20.003-MNA-302
Customer Doc. Nbr.

Sh. 20 & 302
Cont. 29 = H02

WE RESERVE ALL RIGHTS IN THIS DOCUMENT AND IN THE INFORMATION CONTAINED THEREIN. REPRODUCTION, USE OR DISCLOSURE TO THIRD PARTIES WITHOUT EXPESS AUTHORITY IS STRICTLY FORBIDDEN.

XDB1

REMARK	CABLE	EQUIPMENT	Wire No	Terminal number	TYPE	WIRE NO.	EQUIPMENT	CABLE	REMARK
BLACK 1,5 mm²		-QAB:-XDB/10		1	PT 2.5		-BCF:X100:10		BLACK 1,5 mm²
BLACK 1,5 mm²		-XDX:18		2	PT 2.5		-QAB:-XDB/11		BLACK 1,5 mm²
BLACK 1,5 mm²		-QAB:-XDB/7		3	PT 2.5		-BCF:X100:18		BLACK 1,5 mm²
BLACK 1,5 mm²		-XDX:19		4	PT 2.5		-QAB:-XDB/8		BLACK 1,5 mm²
BLACK 1,5 mm²		-QAB:-XDB/9		5	PT 2.5				
BLACK 1,5 mm²		-QAB:XDB/37		6	PT 2.5		-XDX:3		BLACK 1,5 mm²
BLACK 1,5 mm²		-QAB:XDB/39		7	PT 2.5		-XDX:4		BLACK 1,5 mm²
BLACK 1,5 mm²		-PFR1:x1		8	PT 2.5		-QAB:XDB/38		BLACK 1,5 mm²
BLACK 1,5 mm²		-PFG1:x1		9	PT 2.5		-QAB:XDB/40		BLACK 1,5 mm²
BLACK 1,5 mm²		-QAB:XDB/47		10	PT 2.5		-XDX:6		BLACK 1,5 mm²
BLACK 1,5 mm²		-XDC1:12		11	PT 2.5		-QAB:XDB/48		BLACK 1,5 mm²
BLACK 1,5 mm²		-QAB:XDB/45		12	PT 2.5		-XDX:7		BLACK 1,5 mm²
BLACK 1,5 mm²		-XDC1:13		13	PT 2.5		-QAB:XDB/46		BLACK 1,5 mm²
BLACK 1,5 mm²		-QAB:XDB:35		14	PT 2.5		-XDC1:18		BLACK 1,5 mm²
BLACK 1,5 mm²		-QBS-KFU-XDB97:18		15	PT 2.5		-QAB:XDB:36		BLACK 1,5 mm²
BLACK 1,5 mm²		-QAB:XDB/1		16	PT 2.5		-XDX:1		BLACK 1,5 mm²
BLACK 1,5 mm²		-XDX:14		17	PT 2.5		-QAB:XDB/2		BLACK 1,5 mm²
BLACK 1,5 mm²		-QAB:XDB/21		18	PT 2.5				
				19	PT 2.5		-QAB:XDB/22		BLACK 1,5 mm²
BLACK 1,5 mm²		-QAB:XDB/43		20	PT 2.5		-XDI3:1		BLACK 1,5 mm²
BLACK 1,5 mm²		-BCF:X110:1		21	PT 2.5		-QAB:XDB/44		BLACK 1,5 mm²
BLACK 1,5 mm²		-QAB:-XDB/41		22	PT 2.5				
				23	PT 2.5		-QAB:-XDB/42		BLACK 1,5 mm²

REMARK: ☆ INTERPANEL LIGHT BUS,OFFERED TOGETHER WITH PANELS.

△ OUTGOING CONTROL CABLE (Supply by Customer).

BRIDGE BAR.

✕ PARTITION PLATE.

(TEST JUMPER.

Ind.	Revision	Date	Name	Approved	Based on:
00	Issued for Approval	26.03.20	YR	AW	BE320003

	Name	Date Prep.
Prepared	YR	26.03.2020
Checked	AW	
Approved	AI	

PROJECT TITLE
BIODIESEL AND FLEXTECH PLANT

ABB EPMV

PT. ABB Sakti Industri

Terminal diagram
BIODIESEL PLANT
SCHEMATIC DIAGRAM
SBC-W INCOMING 2

Scale
Customer PT Multimas Nabati Asahan
Drawing Nbr. 20.003-MNA-302
Customer Doc. Nbr.

Sh. 21 & 302
Cont. 29 = H02

WE RESERVE ALL RIGHTS IN THIS DOCUMENT AND IN THE INFORMATION CONTAINED THEREIN. REPRODUCTION, USE OR DISCLOSURE TO THIRD PARTIES WITHOUT EXPESS AUTHORITY IS STRICTLY FORBIDDEN.

XDC1

REMARK	CABLE	EQUIPMENT	Wire No	Terminal number	TYPE	WIRE NO.	EQUIPMENT	CABLE	REMARK
		+CONTROL_BOX		1	PT 2.5		-SFS:4		BLACK 1,5 mm²
				2	PT 2.5		-BCF:X100:8		BLACK 1,5 mm²
BLACK 1,5 mm²		-BCF:X100:7		3	PT 2.5		+CONTROL_BOX		
				4	PT 2.5				
		+CONTROL_BOX		5	PT 2.5		-SFS:3		BLACK 1,5 mm²
				6	PT 2.5				
BLACK 1,5 mm²		-BCF:X100:9		7	PT 2.5		+CONTROL_BOX		
BLACK 1,5 mm²		-BCF:X100:18		8	PT 2.5				
				9	PT 2.5		-SFC:4		BLACK 1,5 mm²
BLACK 1,5 mm²		-BCF:X100:11		10	PT 2.5				
BLACK 1,5 mm²		-KFA1:11		11	PT 2.5		-PFY1:x1		BLACK 1,5 mm²
BLACK 1,5 mm²		-XDB1:11		12	PT 2.5		+CONTROL_BOX		
BLACK 1,5 mm²		-XDB1:13		13	PT 2.5		+CONTROL_BOX		
BLACK 1,5 mm²		-KFA1:21		14	PT 2.5		+CONTROL_BOX		
		+CONTROL_BOX		15	PT 2.5		-XDX:17		BLACK 1,5 mm²
		+CONTROL_BOX		16	PT 2.5				
		+CONTROL_BOX		17	PT 2.5				
				18	PT 2.5		-XDB1:14		BLACK 1,5 mm²
BLACK 1,5 mm²		-QBS-KFU-XDB97:19		19	PT 2.5				
BLACK 1,5 mm²		-QBS-KFU-XDB97:21		20	PT 2.5				
BLACK 1,5 mm²		-QBS-KFU-XDB97:23		21	PT 2.5				
				22	PT 2.5		-QBS-BGI7:NO		BLACK 1,5 mm²
				23	PT 2.5		-QBS:-XDB93/14		BLACK 1,5 mm²

REMARK: ☆ INTERPANEL LIGHT BUS,OFFERED TOGETHER WITH PANELS.

△ OUTGOING CONTROL CABLE (Supply by Customer).

BRIDGE BAR.

✕ PARTITION PLATE.

(TEST JUMPER.

Ind.	Revision	Date	Name	
00	Issued for Approval	26.03.20	YR	Prepared
				Checked
				Approved

Date Prep. 26.03.2020

Based on: BE320003

PROJECT TITLE
BIODIESEL AND FLEXTECH PLANT

ABB EPMV

PT. ABB Sakti Industri

Terminal diagram
BIODIESEL PLANT
SCHEMATIC DIAGRAM
SBC-W INCOMING 2

Scale
Customer PT Multimas Nabati Asahan
Drawing Nbr. 20.003-MNA-302
Customer Doc. Nbr.

Cont. 29 Sh. 22 & 302 = H02

WE RESERVE ALL RIGHTS IN THIS DOCUMENT AND IN THE INFORMATION CONTAINED THEREIN. REPRODUCTION, USE OR DISCLOSURE TO THIRD PARTIES WITHOUT EXPESS AUTHORITY IS STRICTLY FORBIDDEN.

XDC2

REMARK	CABLE	EQUIPMENT	Wire No	Terminal number	TYPE	WIRE NO.	EQUIPMENT	CABLE	REMARK
				1	PT 2.5		-BCF:X100:4		BLACK 1,5 mm²
				2	PT 2.5		-BCF:X100:3		BLACK 1,5 mm²
				3	PT 2.5		-BCF:-X100:21		BLACK 1,5 mm²
				4	PT 2.5		-BCF:X100:23		BLACK 1,5 mm²
				5	PT 2.5		-BCF:-X100:20		BLACK 1,5 mm²
				6	PT 2.5				
				7	PT 2.5				
				8	PT 2.5		-BCF:-X110:16		BLACK 1,5 mm²
				9	PT 2.5		-BCF:-X110:15		BLACK 1,5 mm²
				10	PT 2.5		-BCF:-X110:14		BLACK 1,5 mm²
				11	PT 2.5		-BCF:-X110:19		BLACK 1,5 mm²
				12	PT 2.5		-BCF:-X110:18		BLACK 1,5 mm²
				13	PT 2.5		-BCF:-X110:17		BLACK 1,5 mm²
				14	PT 2.5		-BCF:-X110:22		BLACK 1,5 mm²
				15	PT 2.5		-BCF:-X110:21		BLACK 1,5 mm²
				16	PT 2.5		-BCF:-X110:20		BLACK 1,5 mm²
				17	PT 2.5		-SFS:7		BLACK 1,5 mm²
				18	PT 2.5		-SFS:8		BLACK 1,5 mm²
BLACK 1,5 mm²		-QBS:-XDB93/12		19	PT 2.5				
BLACK 1,5 mm²		-QBS:-XDB93/10		20	PT 2.5				
				21	PT 2.5		-QBS:-XDB93/11		BLACK 1,5 mm²
BLACK 1,5 mm²		-QBS:-XDB93/21		22	PT 2.5				
BLACK 1,5 mm²		-QBS:-XDB93/19		23	PT 2.5				
				24	PT 2.5		-QBS:-XDB93/20		BLACK 1,5 mm²

REMARK: ☆ INTERPANEL LIGHT BUS,OFFERED TOGETHER WITH PANELS.

△ OUTGOING CONTROL CABLE (Supply by Customer).

BRIDGE BAR.

✕ PARTITION PLATE.

(TEST JUMPER.

Ind.	Revision	Date	Name	Approved	Date Prep.	Prepared	Checked
00	Issued for Approval	26.03.20	YR	AI	26.03.2020	YR	AW

PROJECT TITLE
BIODIESEL AND FLEXTECH PLANT

Based on: BE320003

ABB EPMV

PT. ABB Sakti Industri

Terminal diagram
BIODIESEL PLANT
SCHEMATIC DIAGRAM
SBC-W INCOMING 2

Scale
Customer: PT Multimas Nabati Asahan
Drawing Nbr.: 20.003-MNA-302
Customer Doc. Nbr.

Sh. 23 & 302
Cont. 29 = H02

XDI

REMARK	CABLE	EQUIPMENT	WIRE NO.	TYPE	Terminal number	Wire No	EQUIPMENT	CABLE	REMARK
		-PREVIOUS_PNL-XDI:2		PT 2.5	1		-FCM9:1		BLACK 2,5 mm²
		-PREVIOUS_PNL-XDI:4		PT 2.5	2		-NEXT_PNL-XDI:1		BLACK 2,5 mm²
		-PREVIOUS_PNL-XDI:6		PT 2.5	3		-FCM9:3		BLACK 2,5 mm²
		-PREVIOUS_PNL-XDI:8		PT 2.5	4		-NEXT_PNL-XDI:3		BLACK 2,5 mm²
				PT 2.5	5		-FCM2:1		BLACK 2,5 mm²
				PT 2.5	6		-NEXT_PNL-XDI:5		BLACK 2,5 mm²
				PT 2.5	7		-FCM2:3		BLACK 2,5 mm²
				PT 2.5	8		-NEXT_PNL-XDI:7		BLACK 2,5 mm²

REMARK: ☆ INTERPANEL LIGHT BUS,OFFERED TOGETHER WITH PANELS.
△ OUTGOING CONTROL CABLE (Supply by Customer).
BRIDGE BAR.
✕ PARTITION PLATE.
(TEST JUMPER.

Ind.	Revision	Date	Name		
				Date Prep.	26.03.2020
				Prepared	YR
00	Issued for Approval	26.03.20	YR	Checked	AW
				Approved	AI

PROJECT TITLE
BIODIESEL AND FLEXTECH PLANT
Based on: BE320003

ABB EPMV
PT. ABB Sakti Industri

Terminal diagram
BIODIESEL PLANT
SCHEMATIC DIAGRAM
SBC-W INCOMING 2

Scale		= H02
Customer	PT Multimas Nabati Asahan	& 302
Drawing Nbr.	20.003-MNA-302	Sh. 24
Customer Doc. Nbr.		Cont. 29

WE RESERVE ALL RIGHTS IN THIS DOCUMENT AND IN THE INFORMATION CONTAINED THEREIN. REPRODUCTION, USE OR DISCLOSURE TO THIRD PARTIES WITHOUT EXPESS AUTHORITY IS STRICTLY FORBIDDEN.

XDI2

REMARK	CABLE	EQUIPMENT	WIRE NO.	TYPE	Terminal number	Wire No	EQUIPMENT	CABLE	REMARK
		-PREVIOUS_PNL-XDI2:2		PT 2,5	1				
BLACK 2,5 mm²		-FCM3:1		PT 2,5	2		-NEXT_PNL-XDI2:1		
		-PREVIOUS_PNL-XDI2:4		PT 2,5	3				
BLACK 2,5 mm²		-FCM3:3		PT 2,5	4		-NEXT_PNL-XDI2:3		

REMARK: ☆ INTERPANEL LIGHT BUS,OFFERED TOGETHER WITH PANELS.
△ OUTGOING CONTROL CABLE (Supply by Customer).
BRIDGE BAR.
✕ PARTITION PLATE.
(TEST JUMPER.

Ind.	Revision	Date	Name		
				Date Prep.	26.03.2020
				Prepared	YR
00	Issued for Approval	26.03.20	YR	Checked	AW
				Approved	AI

PROJECT TITLE
BIODIESEL AND FLEXTECH PLANT
Based on: BE320003

ABB EPMV
PT. ABB Sakti Industri

Terminal diagram
BIODIESEL PLANT
SCHEMATIC DIAGRAM
SBC-W INCOMING 2

Scale		= H02
Customer	PT Multimas Nabati Asahan	& 302
Drawing Nbr.	20.003-MNA-302	Sh. 25
Customer Doc. Nbr.		Cont. 29

WE RESERVE ALL RIGHTS IN THIS DOCUMENT AND IN THE INFORMATION CONTAINED THEREIN. REPRODUCTION, USE OR DISCLOSURE TO THIRD PARTIES WITHOUT EXPESS AUTHORITY IS STRICTLY FORBIDDEN.

WE RESERVE ALL RIGHTS IN THIS DOCUMENT AND IN THE INFORMATION CONTAINED THEREIN. REPRODUCTION, USE OR DISCLOSURE TO THIRD PARTIES WITHOUT EXPESS AUTHORITY IS STRICTLY FORBIDDEN.

XDI3

REMARK	CABLE	EQUIPMENT	Wire No	Terminal number	TYPE	WIRE NO.	EQUIPMENT	CABLE	REMARK
BLACK 1,5 mm²		-XDB1:20		1	PT 2.5		-FCM3:2		BLACK 1,5 mm²
				2	PT 2.5				
BLACK 1,5 mm²		-QAB:-XDB/3		3	PT 2.5				
BLACK 1,5 mm²		-QBS:-XDB93/8		4	PT 2.5				
BLACK 1,5 mm²		-QBS:-XDB93/17		5	PT 2.5				
				6	PT 2.5				
				7	PT 2.5				
				8	PT 2.5				
				9	PT 2.5				
BLACK 1,5 mm²		-FCM3:4		10	PT 2.5		-BCF:X110:2		BLACK 1,5 mm²
				11	PT 2.5				
BLACK 1,5 mm²		-BCF:X110:3		12	PT 2.5				
BLACK 1,5 mm²		-BCF:X110:5		13	PT 2.5		-QAB:-XDB/4		BLACK 1,5 mm²
BLACK 1,5 mm²		-BCF:X110:7		14	PT 2.5		-QBS:-XDB93/7		BLACK 1,5 mm²
BLACK 1,5 mm²		-BCF:X110:8		15	PT 2.5		-QBS:-XDB93/18		BLACK 1,5 mm²
BLACK 1,5 mm²		-BCF:X110:10		16	PT 2.5				
BLACK 1,5 mm²		-BCF:X110:11		17	PT 2.5				
BLACK 1,5 mm²		-BCF:X110:13		18	PT 2.5				

REMARK: ☆ INTERPANEL LIGHT BUS,OFFERED TOGETHER WITH PANELS.

△ OUTGOING CONTROL CABLE (Supply by Customer).

BRIDGE BAR.

✕ PARTITION PLATE.

(TEST JUMPER.

Ind.	Revision	Date	Name	Approved
00	Issued for Approval	26.03.20	YR	AI

	Name	Date Prep.
Prepared	YR	26.03.2020
Checked	AW	

PROJECT TITLE
BIODIESEL AND FLEXTECH PLANT

Based on: BE320003

ABB EPMV

PT. ABB Sakti Industri

Terminal diagram
BIODIESEL PLANT
SCHEMATIC DIAGRAM
SBC-W INCOMING 2

Scale
Customer: PT Multimas Nabati Asahan
Drawing Nbr.: 20.003-MNA-302
Customer Doc. Nbr.

Sh. 26 & 302
Cont. 29 = H02

WE RESERVE ALL RIGHTS IN THIS DOCUMENT AND IN THE INFORMATION CONTAINED THEREIN. REPRODUCTION, USE OR DISCLOSURE TO THIRD PARTIES WITHOUT EXPESS AUTHORITY IS STRICTLY FORBIDDEN.

XDI6

REMARK	CABLE	EQUIPMENT	Wire No	Terminal number	TYPE	WIRE NO.	EQUIPMENT	CABLE	REMARK
		-PREVIOUS_PNL-XDI6:2		1	PT 2.5				
BLACK 1,5 mm²		-FCM62:1		2	PT 2.5		-NEXT_PNL-XDI6:1		
		-PREVIOUS_PNL-XDI6:4		3	PT 2.5				
BLACK 1,5 mm²		-FCM62:3		4	PT 2.5		-NEXT_PNL-XDI6:2		
		-PREVIOUS_PNL-XDI6:6		5	PT 2.5				
				6	PT 2.5		-NEXT_PNL-XDI6:3		
		-PREVIOUS_PNL-XDI6:8		7	PT 2.5				
				8	PT 2.5		-NEXT_PNL-XDI6:4		

REMARK: ☆ INTERPANEL LIGHT BUS,OFFERED TOGETHER WITH PANELS.

△ OUTGOING CONTROL CABLE (Supply by Customer).

BRIDGE BAR.

✕ PARTITION PLATE.

(TEST JUMPER.

Ind.	Revision	Date	Name	
00	Issued for Approval	26.03.20	YR	Prepared
				Checked
				Approved

Date Prep. 26.03.2020

PROJECT TITLE
BIODIESEL AND FLEXTECH PLANT

Based on: BE320003

ABB EPMV

PT. ABB Sakti Industri

Terminal diagram
BIODIESEL PLANT
SCHEMATIC DIAGRAM
SBC-W INCOMING 2

Scale
Customer PT Multimas Nabati Asahan
Drawing Nbr. 20.003-MNA-302
Customer Doc. Nbr.

Sh. 27 & 302
Cont. 29 = H02

WE RESERVE ALL RIGHTS IN THIS DOCUMENT AND IN THE INFORMATION CONTAINED THEREIN. REPRODUCTION, USE OR DISCLOSURE TO THIRD PARTIES WITHOUT EXPESS AUTHORITY IS STRICTLY FORBIDDEN.

XDV

REMARK	CABLE	EQUIPMENT	Wire No	Terminal number	TYPE	WIRE NO.	EQUIPMENT	CABLE	REMARK
BLACK 1,5 mm²		-FCM60:1		1	PT 2,5		-BAT1:a		BLACK 1,5 mm²
BLACK 1,5 mm²		-FCM60:3		2	PT 2,5		-BAT2:a		BLACK 1,5 mm²
BLACK 1,5 mm²		-FCM60:5		3	PT 2,5		-BAT3:a		BLACK 1,5 mm²
BLACK 1,5 mm²		-XTV1:8		● 4	PT 2,5		-BAT1:n		BLACK 1,5 mm²
				● 5	PT 2,5		-BAT2:n		BLACK 1,5 mm²
Y/G 2,5 mm²		-XE2		● 6	PT 2,5		-BAT3:n		BLACK 1,5 mm²
BLACK 1,5 mm²		-FCM61:1		7 ●	PT 2,5				
BLACK 1,5 mm²		-RAA1:x1		8 ●	PT 2,5		-BAT1:da		BLACK 1,5 mm²
				● 9	PT 2,5		-BAT1:dn		BLACK 1,5 mm²
				● 10	PT 2,5		-BAT2:da		BLACK 1,5 mm²
				● 11	PT 2,5		-BAT2:dn		BLACK 1,5 mm²
				● 12	PT 2,5		-BAT3:da		BLACK 1,5 mm²
BLACK 1,5 mm²		-RAA1:x2		● 13	PT 2,5		-BAT3:dn		BLACK 1,5 mm²
BLACK 1,5 mm²		-FCM61:3		● 14	PT 2,5				
Y/G 2,5 mm²		-XE2							
BLACK 1,5 mm²		-BCF:X130:9		15	PT 2,5		-FCM62:2		BLACK 1,5 mm²
BLACK 1,5 mm²		-BCF:X130:10		16	PT 2,5		-FCM62:4		BLACK 1,5 mm²

REMARK: ☆ INTERPANEL LIGHT BUS,OFFERED TOGETHER WITH PANELS.

△ OUTGOING CONTROL CABLE (Supply by Customer).

BRIDGE BAR.

✕ PARTITION PLATE.

(TEST JUMPER.

Ind.	Revision	Date	Name		
00	Issued for Approval	26.03.20	YR	Prepared	YR
				Checked	AW
				Approved	AI
				Date Prep.	26.03.2020

PROJECT TITLE
BIODIESEL AND FLEXTECH PLANT

Based on: BE320003

ABB EPMV

PT. ABB Sakti Industri

Terminal diagram
BIODIESEL PLANT
SCHEMATIC DIAGRAM
SBC-W INCOMING 2

Scale
Customer PT Multimas Nabati Asahan
Drawing Nbr. 20.003-MNA-302
Customer Doc. Nbr.

Sh. 28 & 302
Cont. 29 = H02

WE RESERVE ALL RIGHTS IN THIS DOCUMENT AND IN THE INFORMATION CONTAINED THEREIN. REPRODUCTION, USE OR DISCLOSURE TO THIRD PARTIES WITHOUT EXPESS AUTHORITY IS STRICTLY FORBIDDEN.

XDX

REMARK	CABLE	EQUIPMENT	Wire No	Terminal number	TYPE	WIRE NO.	EQUIPMENT	CABLE	REMARK
BLACK 1,5 mm²		-XDB1:16		1	PT 2.5		-FCM2:2		BK 1,5 mm²
BLACK 1,5 mm²		-BCF:-X100:1		2	PT 2.5				
BLACK 1,5 mm²		-XDB1:6		3	PT 2.5				
BLACK 1,5 mm²		-XDB1:7		4	PT 2.5				
BLACK 1,5 mm²		-KFA1:14		5	PT 2.5				
BLACK 1,5 mm²		-XDB1:10		6	PT 2.5				
BLACK 1,5 mm²		-XDB1:12		7	PT 2.5				
BLACK 1,5 mm²		-KFA1:24		8	PT 2.5				
BLACK 1,5 mm²		-SFS:1		9	PT 2.5				
BLACK 1,5 mm²		-BCF:X100:16		10	PT 2.5				
BLACK 1,5 mm²		-BCF:X100:14		11	PT 2.5				
				12	PT 2.5				
BLACK 1,5 mm²		-QBS-KFU-XDB97:16		13	PT 2.5				
BK 1,5 mm²		-FCM2:4		14	PT 2.5		-XDB1:17		BLACK 1,5 mm²
				15	PT 2.5		-BCF:-X100:2		BLACK 1,5 mm²
				16	PT 2.5		-PFR1:x2		BLACK 1,5 mm²
				17	PT 2.5		-XDC1:15		BLACK 1,5 mm²
				18	PT 2.5		-XDB1:2		BLACK 1,5 mm²
				19	PT 2.5		-XDB1:4		BLACK 1,5 mm²
				20	PT 2.5		-KFA1:A2		BLACK 1,5 mm²
				21	PT 2.5				
				22	PT 2.5		-QBS-KFU-XDB97:17		BLACK 1,5 mm²

REMARK: ☆ INTERPANEL LIGHT BUS,OFFERED TOGETHER WITH PANELS.

△ OUTGOING CONTROL CABLE (Supply by Customer).

BRIDGE BAR.

✕ PARTITION PLATE.

(TEST JUMPER.

Ind.	Revision	Date	Name	Approved
00	Issued for Approval	26.03.20	YR	A1

	Name	Date Prep.
Prepared	YR	26.03.2020
Checked	AW	

PROJECT TITLE
BIODIESEL AND FLEXTECH PLANT

Based on: BE320003

ABB EPMV

PT. ABB Sakti Industri

Terminal diagram
BIODIESEL PLANT
SCHEMATIC DIAGRAM
SBC-W INCOMING 2

Scale
Customer: PT Multimas Nabati Asahan
Drawing Nbr.: 20.003-MNA-302
Customer Doc. Nbr.

Sh. 29 & 302
Cont. 29 = H02